BID SUBMITTAL FORM
Alabama County Joint Bidding Program
Heavy Equipment – BID ITEM: LIGHT DUTY BACKHOE

Company Name: THOMPSON TRACTOR COMPANY

Address: PO BOX 10367

BIRMINGHAM AL 35202-6367

Bid Submitted by: JAY SMITH
(Name of company representative)

Title: SALES OPERATION MANAGER E-mail address: JAYSMITH@THOMPSONTRACTOR.COM

Phone: 205-849-4242 Fax: _____

By submitting this bid, we agree:

	Initials
The equipment model number identified below meets the bid specs for this bid item.	JAS
That the bid price will be honored for all counties for the period from Jan. 1, 2024 to Dec. 31, 2024.	JAS
The equipment will be delivered at the bid price to all counties participating in the joint bid program.	JAS
The company acknowledges the freight preparation and delivery price is to be included in the total bid price for the standard machine.	JAS
The company representative listed above will be the contact person for purchasing this bid item under the joint bid program.	JAS
The bid is accompanied by a current catalog or model specification document for the model number identified below.	JAS
The bid is accompanied by a copy of the manufacturer's standard warranty as required in the bid specifications.	JAS
The bid includes the e-verify documentation required by Alabama law.	JAS
If awarded the bid, a performance bond will be provided upon request.	JAS
The bid documents include the **Manufacturer's Suggested Retail Price Sheet (MSRP) for the Standard Machine.**	JAS

Total Bid Price for Standard Machine: $ 102,061
(Total Bid Price for Standard Machine Includes Freight Preparation, Delivery and Standard Warranty Costs)*

Freight Preparation and Delivery: $ 5,818
(Included in Standard Machine Bid Price)

Manufacturer's Suggested Retail Price for Standard Machine: $ 134,043

Equipment Model #: CATERPILLAR 416

Description: BACKHOE LOADER

Signature of company representative submitting bid: Jay Smith

Title: SALES OPERATIONS MANAGER

* **NOTE:** Award will be made based on the total cost of the **Standard Machine**. The total cost of the standard machine is to include the freight preparation, delivery and standard warranty cost. Freight preparation, delivery will be excluded from the total bid price of the standard machine in determining the percentage discount for any available options.

BID SUBMITTAL FORM: OPTION COST SHEET

By submitting this bid, we agree:

To offer any available options at the percent difference between the Manufacturer's Suggested Retail Price Sheet and the actual bid price on the Standard Machine* _____

The bid documents include the **Manufacturer's Suggested Retail Price Sheet (MSRP)** for the Standard Machine _____

Equipment Model #: CATERPILLAR 416

Description: BACKHOE LOADER

Signature of company representative submitting bid: _____

Title: SALES OPERATIONS MANAGER

***Note:** The percent difference between the **Manufacturer's Suggested Retail Price Sheet (MSRP)** for the standard machine as specified by these **Bid Specifications** and the actual price bid by the vendor will be calculated to determine the percentage discount to be applied to any available options. The bid price of the freight preparation, delivery cost shall be excluded in determining the percentage discount to be applied to available options. Any individual county may choose to add any available option to the standard machine at the percentage discount at the time of purchase.

Backhoe maximum digging depth -- 14 ft. 2in.

Yes X No ___
Page # 15

Boom Lift @ 12 ft. -- 2,200 lbs.

Yes X No ___
Page # 15

BRAKES

Service brakes – hydraulic wet disk

Yes X No ___
Page # 19

Parking brake

Yes X No ___
Page # 12

TIRES AND OUTRIGGERS

Reversible type for use on both paved and non-paved surfaces

Yes X No ___
Page # 20

Minimum 19.5L – 24/10 PR rear tires and wheels

Yes X No ___
Page # 12

Minimum 12L – 16/8 PR front tires and wheels

Yes X No ___
Page # 12

OIL ANALYSIS

To be included at no cost of the duration of the warranty period selected at intervals recommended by the manufacturer's warranty and maintenance schedule.

Yes X No ___
Page # —

WEIGHT (STANDARD OPERATING)

The factory specified operating weight only. No additional weights may be added for the purpose of meeting these specifications. Minimum 15,800 lbs. SAE standard equipped with 2 wheel drive and ROPS Canopy.

Yes X No ___
Page # 1,11

SAFETY DEVICES

Include a fire extinguisher that meets current minimum OSHA requirements complete with Mounting hardware installed on the machine.

Yes X No ___
Page # VENDOR

Include a rotating or flashing safety beacon installed on top of the cab.

Yes X No ___
Page # 20

Cat® 416

Backhoe Loader

The Cat® 416 Backhoe Loader delivers exceptional performance, increased fuel efficiency, superior hydraulic system and an updated operator station. The 416 features the following:

- **Ergonomic Operator Station** – Ample legroom inside the cab makes rotating the seat simple. The air suspension seat provides comfort to the operator while roading.
- **Joystick Controls** – Pilot joysticks are available for additional operator comfort, reduced fatigue and increased productivity. New Proportional Thumb Rollers on the Pilot Joysticks places E-Stick and Rear Auxiliary Controls at the operator's fingertips.
- **Load Sensing Hydraulics** – The Cat Backhoe Loader's load sensing piston pump provides full hydraulic lifting and digging forces at any engine speed. Variable flow pump matches hydraulic power to work demands.
- **Powershift Transmission** – A Four Speed Powershift Transmission is available to make shifting gears smooth and as simple as twisting the Powershuttle Lever.
- **Spring Applied Hydraulically Released (SAHR) Parking Brake** – A SAHR Parking Brake is available and activated at the push of a button and automatically engages when the machine is powered down.
- **Machine Performance** – The proven Cat C3.6 engine delivers solid performance and meets U.S. EPA Tier 4 Final/EU Stage V emission standards by utilizing Selective Catalytic Reduction technology with a diesel oxidation catalyst. The system allows the operator to disconnect the machine, even while the diesel exhaust fluid is being purged from the system.
- **Machine Versatility** – The all new Integrated Tool Carrier (IT Coupler) for Single Tilt Loader Arm configurations are available from the factory or for simple field installation. The Cat Backhoe Loader with Integrated Tool Carrier (IT Coupler) will be the most versatile machine on the job site providing quick connection to a variety of Cat Attachments.
- **Cat Attachments** – A large portfolio of Backhoe Loader Attachments, including but not limited to, Quick Couplers, Thumbs, assorted Buckets, and Brooms are available from the factory or for field installation. Cat Backhoe Loaders will be "Dirt Ready" upon delivery.

Specifications

Engine

Engine	C3.6 70 kW (96 hp) Electronic Turbo Intercooled	
Ratings at 2,200 rpm		
Gross Power SAE J1995	72 kW	96 hp
Gross Power ISO 14396	70 kW	94 hp
Net Power Rating at 2,200 rpm		
SAE J1349	64 kW	86 hp
ISO 9249	64 kW	85 hp
Net Peak Power Rating @ 2,200 rpm		
SAE J1349	64 kW	86 hp
ISO 9249	64 kW	85 hp
Dimensions		
Bore	98 mm	3.86 in
Stroke	120 mm	4.72 in
Displacement	3.6 L	220 in³
Torque Rise (net) at 1,400 rpm	43%	
SAE J1349 Net	396 N·m	292 lb-ft
Power Rating Conditions		
No de-rating required up to	3048 m	10,000 ft

- Engine meets Tier 4 Final/Stage V emission standards.

Weights*

Operating Weight* (estimated)	7499 kg	16,532 lb
Operating Weight (maximum) (ROPS capacity)	11 000 kg	24,251 lb
Operating Weight (minimum)	7072 kg	15,591 lb
Cab, ROPS/FOPS	139 kg	306 lb
Auto-Shift Transmission	122 kg	269 lb
Ride Control	15 kg	33 lb
Air Conditioning	45 kg	99 lb
All-Wheel Drive	STD	N/A
MP bucket (0.96 m³/1.25 yd³)		
with fold-over forks	915 kg	2,017 lb
without fold-over forks	745 kg	1,642 lb
Loader QC	245 kg	540 lb
Extendible Stick (excludes ft. counterweight)	278 kg	613 lb
Counterweights, base	115 kg	256 lb
Stackable, one	240 kg	529 lb
Maximum	460 kg	1,014 lb

*Machine configuration: standard stick hoe, OROPS canopy, 4WD standard shift transmission, 0.96 m³ (1.25 yd³) GP (General Purpose) loader bucket, 610 mm (24 in) standard duty hoe bucket, front 340/80-18 and rear 500/70-24 tires, 240 kg (530 lb) counterweight, 80 kg (176 lb) operator, full fuel tank.

CAT®

416 Backhoe Loader

Transmission*

Power Shuttle Transmission – Standard		
Forward – 1st	5.5 km/h	3.4 mph
2nd	9.1 km/h	5.7 mph
3rd	21 km/h	13 mph
4th	38 km/h	23 mph
Reverse – 1st	5.5 km/h	3.4 mph
2nd	9.1 km/h	5.7 mph
3rd	21 km/h	13 mph
4th	38 km/h	23 mph
Power-Shift Transmission – Optional		
Forward – 1st	5.9 km/h	3.7 mph
2nd	9.4 km/h	5.8 mph
3rd	20 km/h	12 mph
4th	40 km/h	25 mph
Reverse – 1st	5.9 km/h	3.7 mph
2nd	12 km/h	7.6 mph
3rd	27 km/h	17 mph

*Travel speeds of backhoe loader at full throttle, when equipped with 500/70-24 rear tires.

Axle Ratings

Front Axle, AWD		
Static	23 500 kg	51,808 lb
Dynamic	9000 kg	19,841 lb
Rear Axle		
Static	26 500 kg	58,422 lb
Dynamic	10 000 kg	22,046 lb

Hydraulic System

Type	Closed Center	
Pump Type	Variable-flow, Axial Piston	
Pump Capacity @ 2,200 rpm	132 L/min	34.9 gal/min
System Pressure		
Backhoe	23 000 kPa	3,336 psi
Loader	23 000 kPa	3,336 psi

Steering

Type	Front Wheel Steering	
Power Steering	Hydrostatic	
One Double-Acting Cylinder		
Bore	65 mm	2.6 in
Stroke	106 mm	4.2 in
Rod Diameter	40 mm	1.6 in
Axle Oscillation	11°	
Turning Circle – (inner wheel not braked)		
Outside Front Wheels	8.205 m	26'11"
Outside Widest Loader Bucket	10.745 m	35'3"

Service Refill Capacities

Cooling System with Air Conditioning	18.0 L	4.8 gal
Fuel Tank	160.0 L	42.3 gal
Engine Oil with Filter	9.0 L	2.4 gal
Diesel Exhaust Fluid (DEF)	19.0 L	5.0 gal
Transmission – Power Shuttle		
AWD	18.0 L	4.8 gal
Transmission – Power Shift		
AWD	19.0 L	5.0 gal
Rear Axle	16.0 L	4.2 gal
Planetaries	1.7 L	0.4 gal
Front Axle (AWD)	11.0 L	2.9 gal
Planetaries	0.7 L	0.2 gal
Hydraulic System	95.0 L	25.1 gal
Hydraulic Tank	42.0 L	11.1 gal

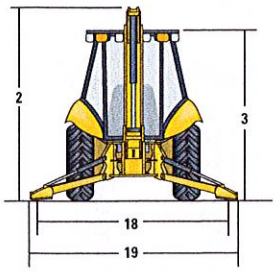

Single Tilt Loader

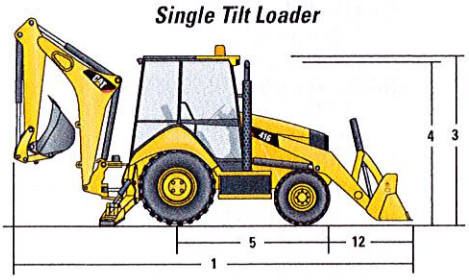

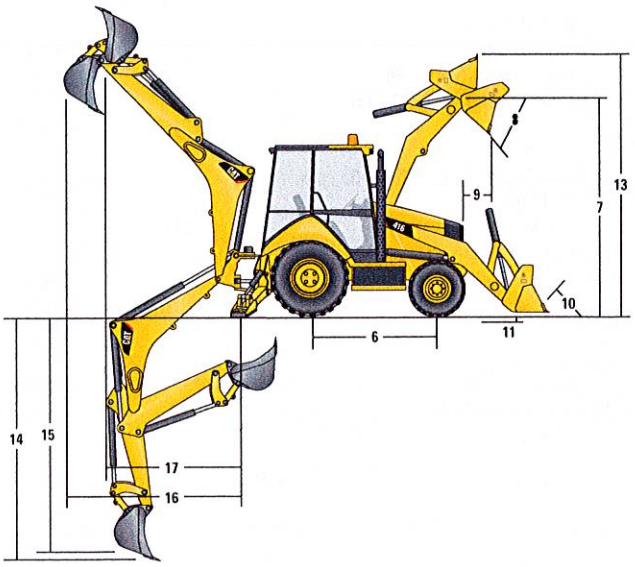

Dimensions

Machine configuration: standard stick hoe, OROPS canopy, 4WD standard shift transmission, 0.96 m³ (1.25 yd³) GP loader bucket, 610 mm (24 in) standard duty hoe bucket, 340/80-18 and 500/70-24 tires, 240 kg (530 lb) counterweight, 80 kg (176 lb) operator, full fuel tank.

		Single Tilt with Pin-On Buckets											
		0.76 m³ (1.0 yd³) GP		0.96 m³ (1.25 yd³) GP		1.0 m³ (1.31 yd³) GP		1.07 m³ (1.40 yd³) GP		1.0 m³ (1.31 yd³) MP		1.07 m³ (1.40 yd³) MP	
1	Overall Length (loader on ground) – S-Stick – mm (ft/in)	7018	(23'0")	7131	(23'5")	7086	(23'3")	7151	(23'6")	7059	(23'2")	7059	(23'2")
	Overall Length (loader on ground) – E-Stick – mm (ft/in)	7024	(23'1")	7136	(23'5")	7091	(23'3")	7157	(23'6")	7064	(23'2")	7064	(23'2")
	Overall Transport Length – S-Stick – mm (ft/in)	7079	(23'3")	7162	(23'6")	7128	(23'5")	7199	(23'7")	7129	(23'5")	7129	(23'5")
	Overall Transport Length – E-Stick – mm (ft/in)	7084	(23'3")	7188	(23'7")	7134	(23'5")	7205	(23'8")	7135	(23'5")	7135	(23'5")
2	Overall Transport Height – Standard Stick – mm (ft/in)	3646	(12'0")	3646	(12'0")	3646	(12'0")	3646	(12'0")	3646	(12'0")	3646	(12'0")
	Overall Transport Height – Extendible Stick – mm (ft/in)	3666	(12'0")	3666	(12'0")	3666	(12'0")	3666	(12'0")	3666	(12'0")	3666	(12'0")
	Overall Width – mm (ft/in)	2248	(7'5")	2248	(7'5")	2248	(7'5")	2248	(7'5")	2248	(7'5")	2248	(7'5")
3	Height to Top of Cab/Canopy – mm (ft/in)	2815	(9'3")	2815	(9'3")	2815	(9'3")	2815	(9'3")	2815	(9'3")	2815	(9'3")
4	Height to Top of Exhaust Stack – mm (ft/in)	2720	(8'11")	2720	(8'11")	2720	(8'11")	2720	(8'11")	2720	(8'11")	2720	(8'11")
	Height to Loader Hinge Pin (transport) – mm (ft/in)	379	(1'3")	378	(1'3")	378	(1'3")	422	(1'5")	420	(1'5")	420	(1'5")
	Ground Clearance (LH step) – mm (ft/in)	316	(1'0")	316	(1'0")	316	(1'0")	316	(1'0")	316	(1'0")	316	(1'0")
	Ground Clearance (AWD guard) – mm (ft/in)	312	(1'0")	312	(1'0")	312	(1'0")	312	(1'0")	312	(1'0")	312	(1'0")
	Ground Clearance (485 kg/1,070 lb counterweight) – mm (ft/in)	289	(0'11")	289	(0'11")	289	(0'11")	289	(0'11")	289	(0'11")	289	(0'11")
5	Rear Axle Centerline to Front Grill – mm (ft/in)	2706	(8'11")	2706	(8'11")	2706	(8'11")	2706	(8'11")	2706	(8'11")	2706	(8'11")
	Front Wheel Tread Gauge – mm (ft/in)	1895	(6'3")	1895	(6'3")	1895	(6'3")	1895	(6'3")	1895	(6'3")	1895	(6'3")
	Rear Wheel Tread Gauge – mm (ft/in)	1728	(5'8")	1728	(5'8")	1728	(5'8")	1728	(5'8")	1728	(5'8")	1728	(5'8")
6	Wheelbase – mm (ft/in)	2200	(7'3")	2200	(7'3")	2200	(7'3")	2200	(7'3")	2200	(7'3")	2200	(7'3")

		Single Tilt Loader with Quick Coupler									
		0.96 m³ (1.25 yd³) GP		1.0 m³ (1.31 yd³) GP		1.15 m³ (1.50 yd³) GP		1.0 m³ (1.31 yd³) MP		1.07 m³ (1.40 yd³) MP	
1	Overall Length (loader on ground) – S-Stick – mm (ft/in)	7312	(24'0")	7268	(23'10")	7310	(24'0")	7219	(23'8")	7219	(23'8")
	Overall Length (loader on ground) – E-Stick – mm (ft/in)	7318	(24'0")	7273	(23'10")	7315	(24'0")	7225	(23'8")	7225	(23'8")
	Overall Transport Length – S-Stick – mm (ft/in)	7289	(23'11")	7255	(23'10")	7287	(23'11")	7217	(23'8")	7217	(23'8")
	Overall Transport Length – E-Stick – mm (ft/in)	7295	(23'11")	7261	(23'10")	7293	(23'11")	7223	(23'8")	7223	(23'8")
2	Overall Transport Height – Standard Stick – mm (ft/in)	3646	(12'0")	3646	(12'0")	3646	(12'0")	3646	(12'0")	3646	(12'0")
	Overall Transport Height – Extendible Stick – mm (ft/in)	3666	(12'0")	3666	(12'0")	3666	(12'0")	3666	(12'0")	3666	(12'0")
	Overall Width – mm (ft/in)	2248	(7'5")	2248	(7'5")	2248	(7'5")	2248	(7'5")	2248	(7'5")
3	Height to Top of Cab/Canopy – mm (ft/in)	2815	(9'3")	2815	(9'3")	2815	(9'3")	2815	(9'3")	2815	(9'3")
4	Height to Top of Exhaust Stack – mm (ft/in)	2720	(8'11")	2720	(8'11")	2720	(8'11")	2720	(8'11")	2720	(8'11")
	Height to Loader Hinge Pin (transport) – mm (ft/in)	345	(1'2")	346	(1'2")	346	(1'2")	344	(1'2")	344	(1'2")
	Ground Clearance (LH step) – mm (ft/in)	316	(1'0")	316	(1'0")	316	(1'0")	316	(1'0")	316	(1'0")
	Ground Clearance (AWD guard) – mm (ft/in)	312	(1'0")	312	(1'0")	312	(1'0")	312	(1'0")	312	(1'0")
	Ground Clearance (485 kg/1,070 lb counterweight) – mm (ft/in)	289	(0'11")	289	(0'11")	289	(0'11")	289	(0'11")	289	(0'11")
5	Rear Axle Centerline to Front Grill – mm (ft/in)	2706	(8'11")	2706	(8'11")	2706	(8'11")	2706	(8'11")	2706	(8'11")
	Front Wheel Tread Gauge – mm (ft/in)	1895	(6'3")	1895	(6'3")	1895	(6'3")	1895	(6'3")	1895	(6'3")
	Rear Wheel Tread Gauge – mm (ft/in)	1728	(5'8")	1728	(5'8")	1728	(5'8")	1728	(5'8")	1728	(5'8")
6	Wheelbase – mm (ft/in)	2200	(7'3")	2200	(7'3")	2200	(7'3")	2200	(7'3")	2200	(7'3")

416 Backhoe Loader

Dimensions

Machine configuration: standard stick hoe, OROPS canopy, 4WD standard shift transmission, 0.96 m³ (1.25 yd³) GP loader bucket, 610 mm (24 in) standard duty hoe bucket, 340/80-18 and 500/70-24 tires, 240 kg (530 lb) counterweight, 80 kg (176 lb) operator, full fuel tank.

Loader Bucket Dimensions and Performance

		Pin-On Buckets					
		0.76 m³ (1.0 yd³) GP	0.96 m³ (1.25 yd³) GP	1.0 m³ (1.31 yd³) GP	1.07 m³ (1.40 yd³) GP	1.0 m³ (1.31 yd³) MP	1.07 m³ (1.40 yd³) MP
	Capacity (SAE rated) – m³ (yd³)	0.76 (1.0)	0.96 (1.26)	1.00 (1.31)	1.07 (1.40)	1.00 (1.31)	1.07 (1.40)
	Overall Bucket Width – mm (in)	2262 (89)	2262 (89)	2406 (95)	2262 (89)	2279 (90)	2425 (95)
	Lift Capacity at Maximum Height – kg (lb)	3053 (6,730)	2962 (6,530)	2967 (6,541)	2900 (6,393)	2736 (6,032)	2724 (6,005)
	Lift Breakout Force – N (lbf)	48 282 (10,854)	45 673 (10,267)	46 360 (10,422)	45 164 (10,153)	44 481 (9,999)	44 385 (9,978)
	Tilt Breakout Force – N (lbf)	54 304 (12,207)	45 719 (10,278)	48 604 (10,926)	46 676 (10,493)	51 462 (11,569)	51 386 (11,551)
	Tipping Load at Breakout Point – kg (lb)	6969 (15,363)	6486 (14,298)	6640 (14,638)	6387 (14,081)	6515 (14,363)	6505 (14,342)
7	Maximum Hinge Pin Height – mm (ft/in)	3488 (11'5")	3488 (11'5")	3488 (11'5")	3488 (11'5")	3488 (11'5")	3488 (11'5")
8	Dump Angle at Full Height – degrees	44°	44°	44°	44°	44°	44°
	Dump Height at Maximum Angle – mm (ft/in)	2837 (9'4")	2758 (9'1")	2790 (9'2")	2736 (9'0")	2803 (9'2")	2803 (9'2")
9	Dump Reach at Maximum Angle – mm (ft/in)	726 (2'5")	807 (2'8")	774 (2'6")	773 (2'6")	722 (2'4")	722 (2'4")
10	Maximum Bucket Rollback at Ground Level – degrees	36°	36°	36°	37°	37°	37°
11	Digging Depth – mm (ft/in)	70 (0'3")	70 (0'3")	70 (0'3")	110 (0'4")	97 (0'4")	97 (0'4")
	Maximum Grading Angle – degrees	116°	113°	114°	114°	116°	116°
	Width of Dozer Cutting Edge – mm (ft/in)	N/A	N/A	N/A	N/A	2262 (7'5")	2406 (7'11")
12	Grill to Bucket Cutting Edge, Carry Position – mm (ft/in)	1397 (4'7")	1480 (4'10")	1447 (4'9")	1518 (5'0")	1447 (4'9")	1447 (4'9")
13	Maximum Operating Height – mm (ft/in)	4206 (13'10")	4356 (14'3")	4354 (14'3")	4366 (14'4")	4378 (14'4")	4407 (14'6")
	Jaw Opening Maximum – mm (ft/in)	N/A	N/A	N/A	N/A	843 (2'9")	843 (2'9")
	Bucket Jaw Clamping Force – N (lbf)	N/A	N/A	N/A	N/A	37 113 (8343)	37 214 (8366)
	Weight (does not include teeth or forks) – kg (lb)	384 (847)	451 (994)	462 (1,019)	473 (1,043)	745 (1,642)	774 (1,706)

		Single Tilt Loader with Quick Coupler				
		0.96 m³ (1.25 yd³) GP	1.0 m³ (1.31 yd³) GP	1.15 m³ (1.50 yd³) GP	1.0 m³ (1.31 yd³) MP	1.07 m³ (1.40 yd³) MP
	Capacity (SAE rated) – m³ (yd³)	0.96 (1.26)	1.00 (1.31)	1.15 (1.50)	1.00 (1.31)	1.07 (1.40)
	Overall Bucket Width – mm (in)	2262 (89)	2406 (95)	2406 (95)	2279 (90)	2425 (95)
	Lift Capacity at Maximum Height – kg (lb)	2579 (5,686)	2579 (5,686)	2546 (5,612)	2438 (5,375)	2402 (5,296)
	Lift Breakout Force – N (lbf)	40 911 (9,197)	41 450 (9,318)	40 608 (9,129)	40 289 (9,057)	40 029 (8,999)
	Tilt Breakout Force – N (lbf)	37 640 (8,462)	39 574 (8,896)	37 351 (8,396)	40 227 (9,043)	40 055 (9,004)
	Tipping Load at Breakout Point – kg (lb)	5721 (12,612)	5841 (12,876)	5696 (12,556)	5811 (12,812)	5787 (12,757)
7	Maximum Hinge Pin Height – mm (ft/in)	3488 (11'5")	3488 (11'5")	3488 (11'5")	3488 (11'5")	3488 (11'5")
8	Dump Angle at Full Height – degrees	44°	44°	44°	44°	44°
	Dump Height at Maximum Angle – mm (ft/in)	2623 (8'7")	2654 (8'9")	2625 (8'7")	2690 (8'10")	2690 (8'10")
9	Dump Reach at Maximum Angle – mm (ft/in)	887 (2'11")	855 (2'10")	886 (2'11")	832 (2'9")	832 (2'9")
10	Maximum Bucket Rollback at Ground Level – degrees	37°	37°	37°	37°	37°
11	Digging Depth – mm (ft/in)	111 (0'4")	111 (0'4")	110 (0'4")	101 (0'4")	101 (0'4")
	Maximum Grading Angle – degrees	109°	110°	109°	111°	111°
	Width of Dozer Cutting Edge – mm (ft/in)	N/A	N/A	N/A	2262 (7'5")	2406 (7'11")
12	Grill to Bucket Cutting Edge, Carry Position – mm (ft/in)	1607 (5'3")	1573 (5'2")	1605 (5'3")	1535 (5'0")	1535 (5'0")
13	Maximum Operating Height – mm (ft/in)	4439 (14'7")	4406 (14'5")	4484 (14'9")	4476 (14'8")	4531 (14'10")
	Jaw Opening Maximum – mm (ft/in)	N/A	N/A	N/A	843 (2'9")	843 (2'9")
	Bucket Jaw Clamping Force – N (lbf)	N/A	N/A	N/A	37 136 (8,348)	37 237 (8,371)
	Weight (does not include teeth or forks) – kg (lb)	447 (985)	457 (1,008)	481 (1,060)	724 (1,596)	753 (1,660)

Dimensions

Machine configuration: standard stick hoe, OROPS canopy, 4WD standard shift transmission, 0.96 m³ (1.25 yd³) GP loader bucket, 610 mm (24 in) standard duty hoe bucket, 340/80-18 and 500/70-24 tires, 240 kg (530 lb) counterweight, 80 kg (176 lb) operator, full fuel tank.

Backhoe Dimensions and Performance

		Standard Stick		E-Stick Retracted		E-Stick Extended	
14	Digging Depth, SAE (max.) – mm (ft/in)	4277	(14'0")	4317	(14'2")	5371	(17'7")
15	Digging Depth, __ mm (8 ft) Flat Bottom – mm (ft/in)	3899	(12'9")	3942	(12'11")	5072	(16'8")
	Digging Depth, 610 mm (2 ft) Flat Bottom – mm (ft/in)	4239	(13'11")	4279	(14'0")	5334	(17'6")
	Reach from Rear Axle Centerline at Ground Line – mm (ft/in)	6690	(21'11")	6726	(22'1")	7731	(25'4")
16	Reach from Swing Pivot at Ground Line – mm (ft/in)	5600	(18'4")	5636	(18'6")	6641	(21'9")
	Maximum Operating Height – mm (ft/in)	5601	(18'5")	5625	(18'5")	6368	(20'11")
	Loading Height – mm (ft/in)	3710	(12'2")	3667	(12'0")	4238	(13'11")
17	Loading Reach – mm (ft/in)	1841	(6'0")	1928	(6'4")	2846	(9'4")
	Swing Arc	180°		180°		180°	
	Bucket Rotation	205°		204°		204°	
18	Stabilizer Spread, Operating Position (center) – mm (ft/in)	3310	(10'10")	3310	(10'10")	3310	(10'10")
	Stabilizer Spread, Operating Position (outside) – mm (ft/in)	3770	(12'4")	3770	(12'4")	3770	(12'4")
	Stabilizer Spread, Transport Position – mm (ft/in)	2322	(7'7")	2322	(7'7")	2322	(7'7")
	Bucket Dig Force – N (lbf)	59 119	(13,291)	58 289	(13,104)	58 289	(13,104)
	Stick Dig Force – N (lbf)	32 374	(7,278)	32 417	(7,288)	23 800	(5,350)

Dimensions with Forks/Material Handling Arm

Fork Tine Length	1070 mm (3'6")		1220 mm (4'0")		1370 mm (4'10")	
Operating Load (SAE J1197) – kg (lb)	1758	(3,875)	1684	(3,713)	1615	(3,559)
SAE Load Center – mm (in)	535	(1'9")	610	(2'0")	685	(2'3")
Operating Load (CEN 474-4) – kg (lb)	1786	(3,938)	1771	(3,904)	1754	(3,867)
CEN Load Center – mm (ft/in)	500	(1'8")	500	(1'8")	500	(1'8")
Overall Length (A) (forks on ground) – mm (ft/in)	7647	(25'1")	7797	(25'7")	7946	(26'1")
Reach at Ground (from grill to heel of fork) – mm (ft/in)	939	(3'1")	939	(3'1")	938	(3'1")
Maximum Reach (from grill to heel of fork) – mm (ft/in)	1524	(5'0")	1524	(5'0")	1524	(5'0")
Fork Height at Maximum Reach – mm (ft/in)	1619	(5'4")	1619	(5'4")	1619	(5'4")
Reach at Maximum Height (from grill to heel of fork) – mm (ft/in)	749	(2'5")	749	(2'5")	749	(2'5")
Maximum Fork Height – mm (ft/in)	3418	(11'3")	3418	(11'3")	3418	(11'3")
Maximum Fork Depth (below ground level) – mm (ft/in)	–38	(–1'11")	–38	(–1'10")	–39	(–1'10")

Material Handling Arm Position	Retracted		Mid-Position		Extended	
Operating Load (SAE J1197 and CEN 474-4) – kg (lb)*	1091	(2,404)	733	(1,615)	531	(1,171)
Overall Length, Maximum – mm (ft/in)	8903	(29'3")	9903	(32'6")	10 901	(35'9")
Reach at Maximum Depth (from machine nose) – mm (ft/in)	544	(1'9")	550	(1'10")	557	(1'10")
Maximum Depth – mm (ft/in)	2618	(8'7")	3618	(11'10")	4616	(15'2")
Maximum Reach (from machine nose) – mm (ft/in)	3221	(10'7")	4221	(13'10")	5219	(17'1")
Height at Maximum Reach – mm (ft/in)	1118	(3'8")	1124	(3'8")	1130	(3'8")
Reach at Maximum Height (from machine nose) – mm (ft/in)	1783	(5'10")	2473	(8'1")	3161	(10'4")
Maximum Height – mm (ft/in)	4445	(14'7")	5169	(16'11")	5891	(19'4")

*These numbers are hydraulically limited.

416 Backhoe Loader

Backhoe Lift Capacity

Cat 416 Standard Stick

Boom Lifting	kg	lb
1	1334	2,941
2	1426	3,144
3	1407	3,101
4	1353	2,983
5	1292	2,849
6	1232	2,716
7	1174	2,589
8	1120	2,469
9	1069	2,358
10	1022	2,254
11	979	2,158
12	939	2,071
13	905	1,996
14	885	1,952
15	916	2,019
Stick Lifting		
16	1568	3,456
17	1916	4,224
18	2328	5,133
19	2436	5,371
20	2884	6,358
21	3540	7,805

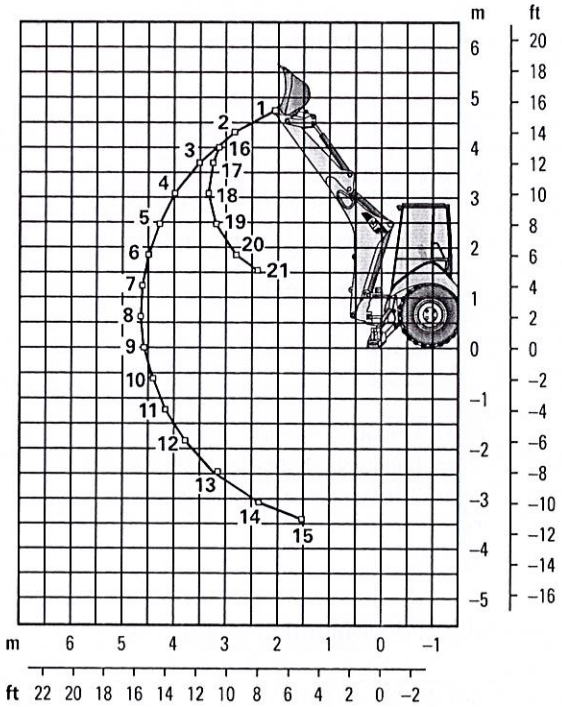

Cat 416 Extendible Stick – Retracted

Boom Lifting	kg	lb
1	1157	2,551
2	1235	2,722
3	1208	2,664
4	1153	2,541
5	1091	2,404
6	1029	2,269
7	970	2,139
8	915	2,017
9	863	1,902
10	814	1,794
11	768	1,692
12	725	1,597
13	684	1,509
14	650	1,432
15	647	1,427
Stick Lifting		
16	1423	3,138
17	1754	3,866
18	2128	4,692
19	2226	4,908
20	2629	5,796
21	3189	7,030
22	0	0

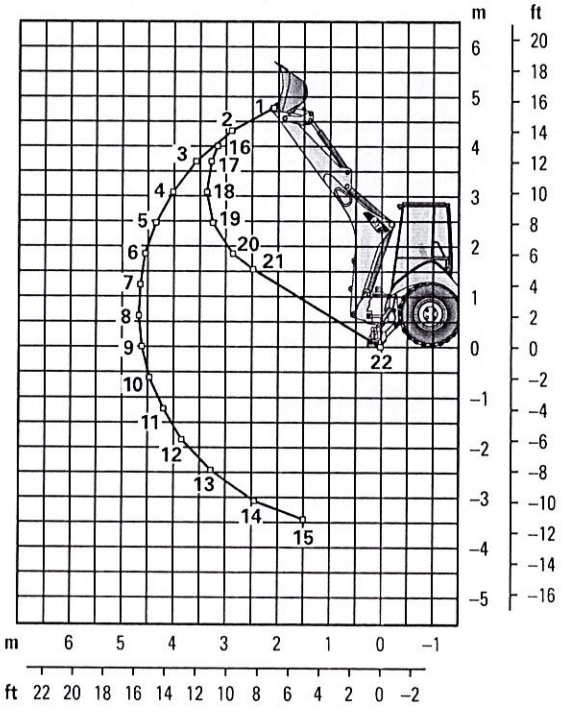

Lift capacities are over-end values calculated according to SAE J31. Values are 87% of the maximum lift force available.
Machine equipped with AWD, OROPS, 0.96 m³ (1.25 yd³) general purpose bucket and no counterweight.
Extendible stick includes 460 kg (1,015 lb) counterweight.

Backhoe Lift Capacity

Cat 416 Extendible Stick – Extended

Boom Lifting	kg	lb
1	640	1,412
2	771	1,700
3	802	1,767
4	799	1,761
5	782	1,724
6	759	1,673
7	733	1,616
8	706	1,557
9	680	1,498
10	654	1,442
11	630	1,388
12	607	1,339
13	587	1,295
14	571	1,259
15	561	1,237
16	566	1,248
17	648	1,429
18	867	1,911
Stick Lifting		
19	597	1,316
20	767	1,692
21	1008	2,222
22	1178	2,597
23	1322	2,915
24	1479	3,260
25	1711	3,773
26	2305	5,082
27	3506	7,730

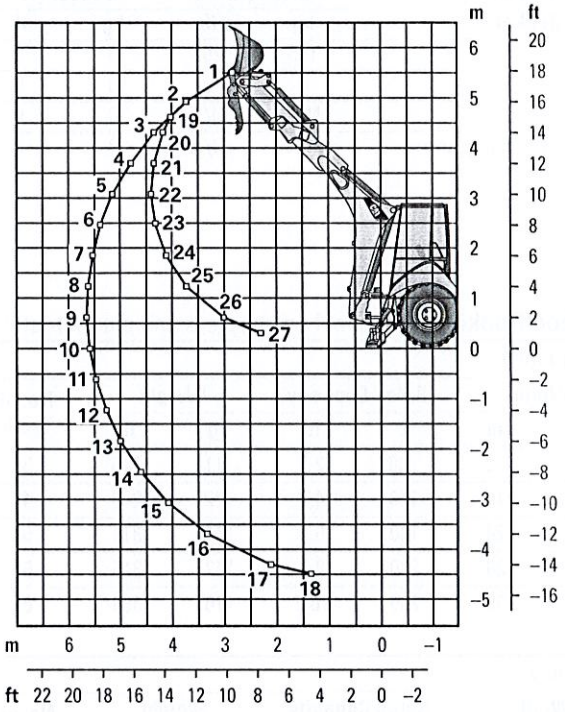

Lift capacities are over-end values calculated according to SAE J31. Values are 87% of the maximum lift force available.
Machine equipped with AWD, OROPS, 0.96 m³ (1.25 yd³) general purpose bucket and no counterweight.
Extendible stick includes 460 kg (1,015 lb) counterweight.

416 Backhoe Loader

Counterweights (Minimum Counterweight Recommendations)

Standard Stick	Pin-On Bucket		Loader QC	
Loader Bucket	kg	lb	kg	lb
GP	115	255	0	0
MP	0	0	0	0
Forks	N/A	N/A	0	0
Material Handling Arm	N/A	N/A	0	0

Extendible Stick	Pin-On Bucket		Loader QC	
Loader Bucket	kg	lb	kg	lb
GP	460	1,015	240	530
MP	115	255	0	0
Forks	N/A	N/A	240	530
Material Handling Arm	N/A	N/A	240	530

Backhoe Buckets (With weld on adapters and pin-on teeth)

Standard Duty

Width		Rated Capacity		Weight		No. of Teeth
mm	in	L	ft³	kg	lb	
305	12	80	2.8	111	245	3
457	18	120	4.2	122	268	4
610	24	180	6.4	141	311	5
762	30	230	8.1	157	345	5
914	36	290	10.2	176	388	6

Heavy Duty

Width		Rated Capacity		Weight		No. of Teeth
mm	in	L	ft³	kg	lb	
305	12	80	2.8	121	266	3
406	16	110	3.9	128	282	3
457	18	120	4.2	135	299	4
610	24	180	6.4	160	353	5
762	30	230	8.1	177	391	5
914	36	290	10.2	201	443	6

Soil Excavation

Width		Rated Capacity		Weight		No. of Teeth
mm	in	L	ft³	kg	lb	
457	18	180	6.4	155	341	4
610	24	240	8.5	182	402	5
762	30	320	11.3	206	454	5
914	36	380	13.4	233	513	6

Rock

Width		Rated Capacity		Weight		No. of Teeth
mm	in	L	ft³	kg	lb	
305	12	70	2.5	127	279	3
457	18	130	4.6	146	322	4
610	24	200	7.1	174	384	5
762	30	270	9.5	197	434	5
914	36	330	11.7	224	493	6

Coral

Width		Rated Capacity		Weight		No. of Teeth
mm	in	L	ft³	kg	lb	
305	12	60	2.1	134	295	4
457	18	100	3.5	155	341	6
610	24	140	4.9	182	402	8
762	30	190	6.7	210	463	10

STANDARD EQUIPMENT

- Air cleaner
- Alarm, back-up
- Audible system fault alarm
- Backhoe controls, mechanical two lever
- Battery, maintenance-free, 850 CCA
- Battery disconnect switch
- Boom transport lock
- Brace, lift cylinder
- Brake, parking, mechanical
- Brakes, hydraulically boosted, oil disc, dual pedals, interlocking
- Bucket level indicator
- Canopy, ROPS/FOPS
- Coat restraint
- Coolant/antifreeze, extended life
- Counterweight, bumper
- Dome light (cab only)
- Diagnostic port for engine
- Differential lock, loader joystick
- Drink holders, two
- Engine, Cat C3.6 (Direct Injection Turbocharged), meets Tier 4 Final/Stage V emission standards, Selective Catalytic Reduction, Diesel Oxidation Catalyst (DOC)
- Engine enclosure, sound suppression, removable side panels
- Face seals, O-ring
- Fan, suction and guard
- Fast reversing shuttle, all gears
- Fenders, rear
- Filters, spin-on: fuel, engine oil, transmission oil, water separator
- Filters, bowl and cartridge: hydraulic fluid
- Flashing hazards/signal lights
- Floor mat
- Four wheel drive
- Four wheel drive shaft guard
- Fuel tank, fully enclosed
- Fully hinged front grill for cooling package cleaning access
- Gauge cluster: coolant temperature, fuel level, torque converter temperature, DEF level
- Ground level fuel fill and DEF fill
- Halogen lights, working (2 front, 2 rear)
- High ambient cooling package
- Hood lock, inside cab
- Hydraulic hose, XT™
- Hydraulic oil cooler
- Hydraulic oil level sight gauge
- Hydraulic valves, loader 2 function
- Hydraulic valves, backhoe 4 function
- Hydraulics, load sensing with variable displacement piston pump
- Indicator lights: wait to start, water in fuel, engine warning, warning lamp, emissions module malfunction, low battery/charging system warning, high hydraulic oil temperature: LCD warnings: engine oil pressure, machine locked, service due, air filter blocked, high coolant temperature, auto idle shutdown, high torque converter temperature, hydraulic filter bypass
- Instrument panel lights
- Key start/stop system
- LCD operator display with soft key controls: engine speed, hour meter, gear/direction, battery voltage, hydraulic oil temperature, torque converter temperature, coolant temperature, trip totals (fuel and hours), lifetime totals (fuel and hours), operator settings (units, brightness, programmable hoe auxiliary flow), service mode diagnostics, maintenance intervals, ECM/system info
- Loader, self-leveling, return-to-dig and transmission disconnect switch
- Loader, single tilt
- Mechanical two lever controls
- Mirror, interior, rearview
- Open circuit breather
- Power receptacle, 5 volt USB, 1 internal
- Power receptacle, 12 volt, 2 internal, 1 external
- Power steering, hydrostatic
- Product Link™, cellular, network manager
- Product Link, satellite, network manager
- Seat belt, retractable, 51 mm (2 in)
- Socket, two roof
- Stabilizer shoes, street
- Steering column, tilting
- Steering knob
- Seat, air suspension, vinyl cover, with armrest
- Starting system, glow plugs
- Storage compartment, lockable
- Storage tray
- Stop and tail lights
- Swing transport lock
- Tilt steering column
- Tires
- Toolbox, external, lockable
- Torque converter
- Throttle, hand and foot, electronic
- Transmission, four speed, manual, syncromesh
- Transmission neutralizer switch
- Transport tie-downs
- Vandalism locks, four
- Warning horn, electric

OPTIONAL EQUIPMENT

- Auxiliary hydraulics, rear, adjustable flow
- Battery, additional, 850 CCA
- Brake, parking, Spring Applied Hydraulically Release (SAHR)
- Cab, standard
- Cold weather fuel (–30° C/–22° F)
- Cold weather package, including additional battery, engine block heater, radiator antifreeze (–50° C/–58° F), cold weather fuel (–30° C/–22° F) and mounting for an ether bottle
- Counterweights, 115 kg (255 lb), 240 kg (530 lb) or 460 kg (1,015 lb)
- Fenders, front with integral steps
- Guard, boom protection plate
- Guard, stabilizer, rock
- Hydraulic valves, loader (3rd valve for MP or Quick Coupler)
- Hydraulic valves, backhoe (5th and 6th function)
- Hydraulic lines, combined function auxiliary
- Joystick controls: pilot operated, excavator style with pattern changer
- LED lights, working (2 front, 2 rear)
- Pattern changer, in cab
- Quick Coupler, hydraulic, dual lock
- Quick Coupler, manual, dual lock
- Quick Coupler, manual, pin lock
- Radio and CD player, Bluetooth®
- Ride Control
- Rotating beacon, magnetic mount
- Seat, air suspension, fabric with armrest
- Seat belt, retractable, 75 mm (3 in)
- Security system, Bluetooth
- Security System, operator display
- Side mirrors, cab, external
- Single Tilt Loader Coupler, Integrated Tool Carrier (IT) Interface
- Stabilizer pads, grouser type
- Stabilizer pads, reversible
- Stick, extendible
- Transmission, 4 speed, powershift
- Vandalism protection, gauge cover
- Work Tool Attachments such as buckets, forks, material handling arms, augers, hammers, brooms, cold planers and vibratory plate compactors. See your Cat dealer for more information.

416	LIGHT DUTY BACKHOE	2024 Pricing
543-3339	416 BHL STANDARD	$99,848
543-4280	STANDARD STICK 14FT	$0
543-4899	4 WHEEL DRIVE POWERTRAIN, STANDARD SHIFT	$12,679
542-7779	ENGINE C3.6 DITA T4F	$10,486
542-7755	GENERAL PURPOSE HYDRAULICS, 4 FUNCTION, 6 BANK	$0
544-0353	BACKHOE PATTERN CONTROLS	$0
544-0873	BASE CANOPY	$0
545-5047	STANDARD DISPLAY	$0
491-6733	(4) HALOGEN WORKLIGHTS	$0
611-0333	VINYL SEAT	$0
206-1747	2" SEAT BELT	$0
544-0934	NO HEATER	$0
560-6797	CELLULAR PRODUCT LINK PLE643	$0
379-2161	12.5 80/19.5L-24 FOUR WHEEL DRIVE GOODYEAR TIRES	$3,131
337-9695	COUNTERWEIGHT, 530 LBS	$1,188
9R-6007	FLIP OVER STABILIZER PAD	$444
545-8548	LOADER BUCKET PINS	$0
337-7382	1 CYD GENERAL PURPOSE BUCKET	$2,990
9R-5321	TWO PIECE CUTTING EDGE	$338
219-3396	BUCKET, 24" HD ROCK	$2,203
559-0872	ANSI INSTRUCTIIONS	$0
421-8926	SERIALIZED TECHNICAL MEDIA KIT	$0
433-0154	STROBE BEACON MAGNETIC MOUNT	$453
423-7607	BOOM WEAR PLATE GROUP	$285
	TOTAL BID PRICE FOR STANDARD MACHINE	**$102,061**
	FREIGHT PREPARATION AND DELIVERY	**$5,818**
	TOTAL MANUFACTURER'S SUGGESTED RETAIL PRICE FOR STANDARD MACHINE	**$134,043**

BID SPECIFICATIONS
FOR
LIGHT DUTY BACKHOE

GENERAL

These specifications shall be construed as the minimum acceptable standards for a light duty loader/backhoe. Should the manufacturer's current published data or specifications exceed these standards, the manufacturer's standards shall be considered minimum and shall be furnished. All integral parts not specifically mentioned in the scope of these specifications that are necessary to provide a complete working unit shall be furnished. Additionally, the machine offered for bid shall include all standard manufacturer's equipment. The light duty loader/backhoe must be a new current production model and shall meet all EPA and other applicable standards at the time of manufacture.

The use of specific names and numbers in the specifications is not intended to restrict the bidder or any seller or manufacturer, but is intended solely for the purpose of indicating the type, size, and quality of equipment considered best adapted to the uses of counties participating in this joint bid.

BID SUBMITTAL FORM

Each bidder must submit his or her bid on the Bid Submittal Form included in the invitation to bid package. All written warranties to be submitted shall be attached to the Bid Submittal Form.

BID PRICE

The bid price shall include all destination charges, delivery charges, title fees, rebates and all other applicable cost and refunds.

MANUALS

Each unit will be provided with one (1) copy of the operator's manual(s) and one (1) copy of the current parts manual(s). Units will not be accepted for delivery until the manuals as outlined above are received by the purchaser.

REPLACEMENT PARTS AVAILABILITY

Parts must be available for five (5) years or 7,500 hours for the piece of equipment bid. If replacement parts are not delivered within three (3) working days of an order being placed, the bidder will deliver an equivalent machine for the county to use at no cost to the county until such time as the parts are delivered to the county so that it can affect repairs to its machine.

WARRANTY

Bidders shall submit a copy of the manufacturer's standard warranty. Warranty shall include service response time of maximum of 36 hours within notification by county.

Yes ✓ No___
Page#_____
or
Attachment X

ENGINE

Four (4) cylinder: four (4) stroke cycle, minimum 220 cubic inch diesel engine, capable of developing a minimum of 86 NET flywheel horsepower.
Engine shall be designed and manufactured by the machine manufacturer

Yes X No ___
Page # 1

STARTING SYSTEM

Shall be equipped with a 12 volt electrical system, heavy duty starting motor.

Yes X No ___
Page # 12

TRANSMISSION

Power shuttle/shift transmission.

Yes X No ___
Page # 12

Minimum of four (4) speeds forward and four (4) reverse speeds.

Yes X No ___
Page # 6, 11

Rear wheel drive with or without limited slip differential. Minimum travel speed: 23 mph.

Yes X No ___
Page # 11

CONTROLS AND HYDRAULICS

Full hydraulic two (2) lever controls with hydraulic load sensing system.

Yes X No ___
Page # 2, 19

FRONT END LOADER

Loader Bucket -- 1.12 min. cu. yd. heavy duty bucket

Yes X No ___
Page # 14

Loader breakout force (lbs.) -- 9,300 lbs.

Yes X No ___
Page # 14

Loader lift capacity max. height (lbs.) -- 6,005 lbs.

Yes X No ___
Page # 14

BACKHOE – TWO LEVER CONTROL SYSTEM (FIXED LENGTH DIPPER STICK)

Backhoe Bucket -- 24 in. heavy-duty rock bucket (4 teeth)

Yes X No ___
Page # 15

Bucket breakout force (lbs.) – 12,500 lbs.

Yes X No ___
Page # 15

Backhoe stick digging force – 7,200 lbs.

Yes X No ___
Page # 15

For more complete information on Cat products, dealer services, and industry solutions, visit us on the web at **www.cat.com**

© 2020 Caterpillar
All rights reserved

Materials and specifications are subject to change without notice. Featured machines in photos may include additional equipment. See your Cat dealer for available options.

CAT, CATERPILLAR, LET'S DO THE WORK, their respective logos, "Caterpillar Corporate Yellow," the "Power Edge" and Cat "Modern Hex" trade dress as well as corporate and product identity used herein, are trademarks of Caterpillar and may not be used without permission.

AEHQ8242-01 (06-2020)
Replaces AEHQ8242
Build Number: 07A
(North America)

416F2

Backhoe Loader

Engine		
Engine Model	Cat® C4.4 ACERT™	
Rated Net Power – SAE J1349	65 kW	87 hp
Rated Net Power – ISO 9249	66 kW	88 hp

Weights		
Operating Weight – Minimum	7214 kg	15,904 lb
Operating Weight – Maximum (ROPS Capacity)	11 000 kg	24,251 lb
Backhoe		
Dig Depth – Standard	4348 mm	14'3"
Dig Depth – E-Stick Extended	5441 mm	17'11"

Features

All New Operator Station
Built with the operator in mind, the new F2 Backhoe Loader cab provides additional machine control at the operator's fingertips, with differential lock on the loader joystick. The ergonomically designed cab provides all day comfort for a more productive day.

Industry Leading Hydraulic Technology
Load sensing piston pump and flow sharing valves provide a hydraulic system designed for smooth operation, increased fuel efficiency, quieter operation and full forces at any engine speed allowing the operator to match power to job demand.

Backhoe Controllability
Now available in pilot controlled joysticks, the F2 Backhoe Loader maximizes the hydraulic performance and power of the loading sensing, flow sharing system.

Greater Versatility
Quick and easy attachment changing provides increased versatility and the ability to match the correct tool to the job application. The hydraulic backhoe coupler allows for a tool change without exiting the operation station.

Superior Power and Performance
Industry leading structural design and hydraulics mean greater lifting power and breakout forces. Machine aggressiveness delivers outstanding productivity in the toughest applications.

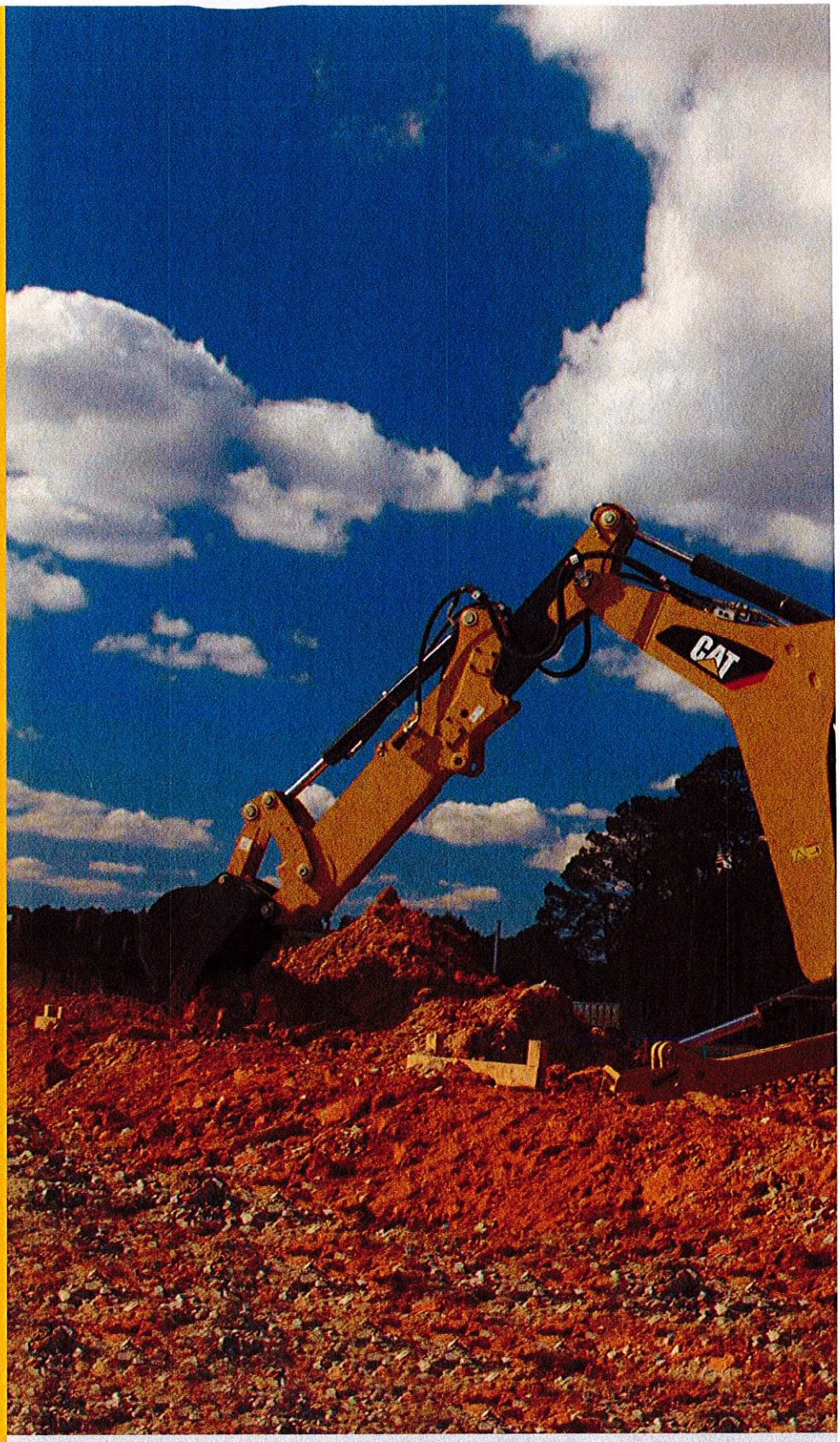

Contents

Operator Station....4
Power Train....6
Advanced Hydraulics....7
Backhoe Performance....8
Loader Performance....8
Work Tools....9
Serviceability....10
Customer Support....10
Specifications....11
Standard Equipment....19
Optional Equipment....20
Notes....21

Experience the new Cat 416F2 Backhoe Loader with features including spacious operator station, optional pilot controls, superior durability and outstanding performance. Safely operate on the job site with quieter hydraulics, increased visibility, and the ability to have four wheel braking engaged without wearing on tires or drive train.

Operator Station

A cab designed for maximum comfort and productivity.

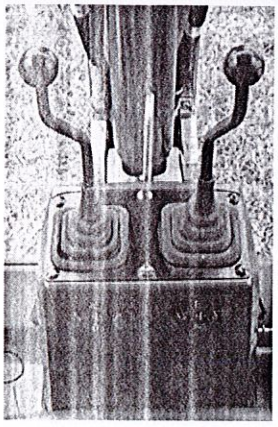

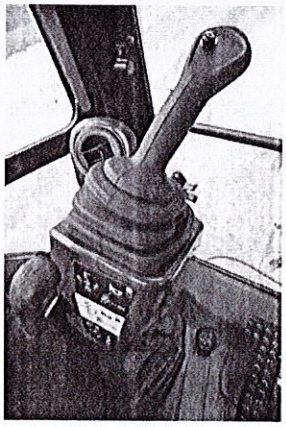

Backhoe Controls

Mechanical controls provide the feedback operators look for in trenching applications. Low effort hydraulics reduce operator fatigue while maintaining performance. Optional joystick controls allow the operator to customize the pod location and control pattern.

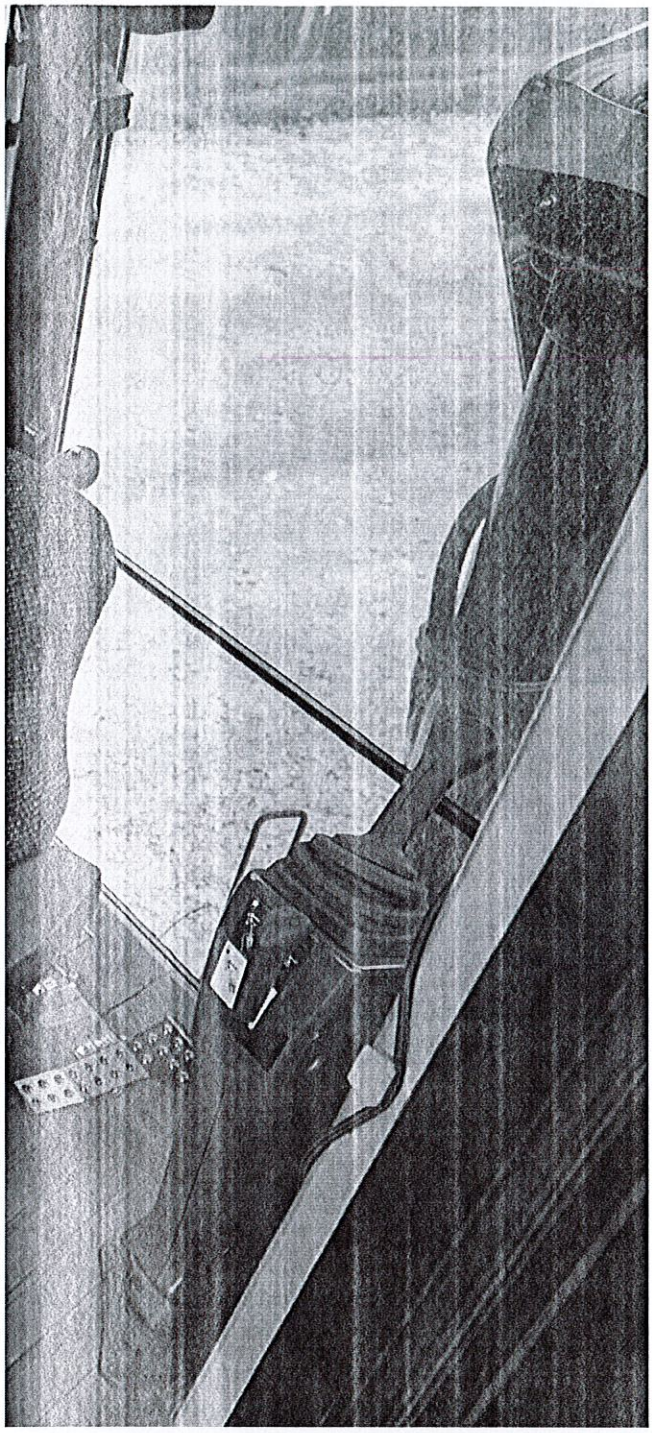

Unmatched Comfort

The ergonomic, automotive style operator station helps you work comfortably and productively all day long. Choose the configuration that meets your needs – Canopy, Cab Deluxe or Cab Deluxe with Air Conditioning. Other features include:

- Adjustable air suspension seat
- Tilt and telescoping steering column
- Excellent visibility over hood and up to bucket dump
- Pantograph windshield wiper
- Large front windshield screen
- Large LCD gauge cluster screen
- Ample legroom
- Differential lock button on loader lever
- Large opening windows
- Solid roof cab
- LED brake lights

Ride Control

The optional Ride Control System smoothes the ride in all conditions, including load and carry, highway roading or simply moving around the job site. The result can be increased operator comfort, potentially reducing operator fatigue, and improved material retention.

Premium Gauge Cluster

Bright and large LCD screen makes it easy to monitor machine operation and settings. LED indicator lights and audible alarms allow the machine to clearly communicate with the operator.

Safety Getting in and out of the Cab

New longer grab handles and ergonomic step placement makes it easy to maintain three points of contact when getting in and out of the cab.

Power Train

Always built for performance, power and efficiency.

Cat Engine

The Cat C4.4 ACERT engine operates quietly while delivering performance and durability. The engine meets U.S. EPA Tier 4 Final emission standards.

Engine features include:

- Selective catalytic reduction
- Diesel oxidation catalyst
- Diesel exhaust fluid with system purge
- Limited operator interaction

Transmission

The standard power shuttle transmission provides four speeds forward and reverse. Hydraulically shifted clutches allow on-the-go direction and travel speed shifts.

- Hydraulic proportional control valves deliver smooth speed and directional shifts.
- Four Wheel Drive option improves mobility and loader performance in poor underfoot conditions and can be activated on-the-go.

Brake Mode Selector

Brake mode selector switch has three positions: two wheel drive, two wheel drive with all wheel braking and four wheel drive. Two wheel drive with all wheel braking provides better tire life while roading and engages the front axle when brakes are applied for improved braking performance. Brake mode selector is included in the 4WD package.

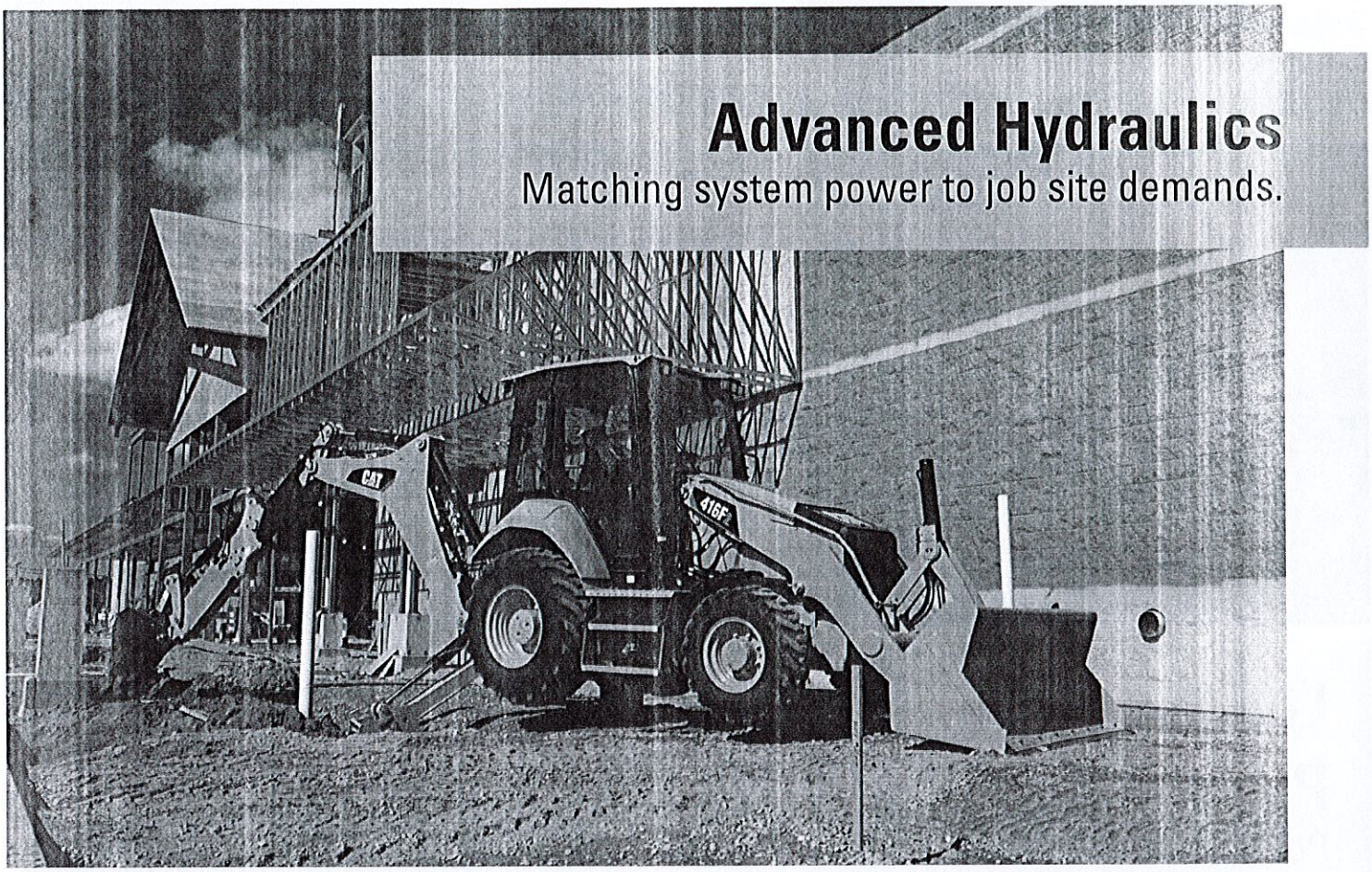

Advanced Hydraulics

Matching system power to job site demands.

Load Sensing Hydraulics

Closed center hydraulic system matches pressure and flow to application demand. Whether you're in full trenching mode or digging around delicate services, you remain in control. In applications such as production trenching where speed is important, the system will provide the flow needed to get the job done quickly and efficiently. The load sensing hydraulic system provides:

- Better fuel efficiency
- Quieter operation
- Reduced component wear
- Cooler hydraulic temperatures
- Full forces at any engine speed

Flow Sharing Valves

Specifically tuned hydraulic valves allow for the multifunction of hydraulic components, without machine manipulation. Hydraulic fluid is shared between implements so that operation isn't interrupted.

Hydraulic Lines

Combination two way and one way flow hydraulic lines add versatility to the machine. By simply changing the lever position, the machine can efficiently run either style hydro mechanical tool.

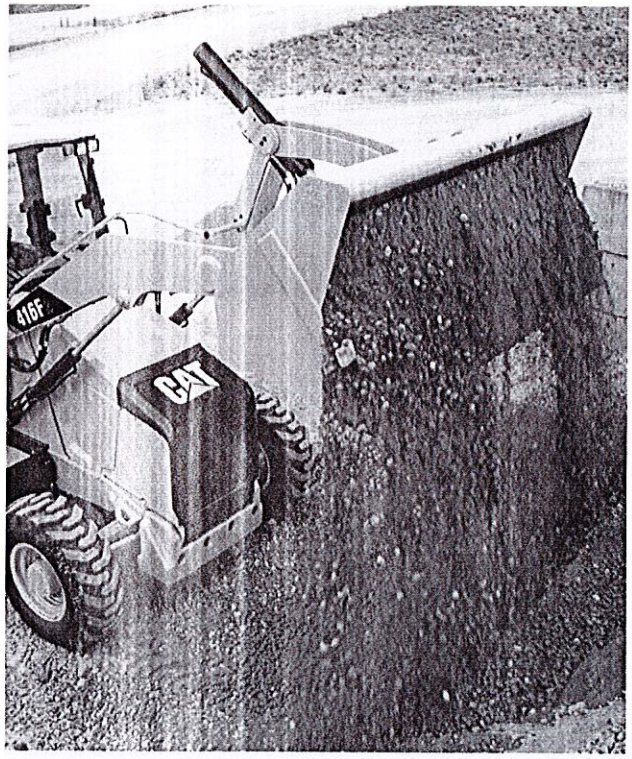

Backhoe Performance

Superior digging forces.

Boom

The excavator-style boom is built for optimum performance and durability. The curved design provides added clearance when digging over obstacles or loading trucks. The narrow boom enhances the viewing area to the bucket and the trench throughout the operating range. More robust swing casting and double clevis design improves durability and reliability.

Stick

Serrated edges on the stick provide improved material clamping for clearing and demolition applications. The optional extendible stick (E-stick) increases reach and dig depth by approximately 1.2 m (4 ft).

Thumbs

Thumb mounting provisions are standard on every Cat Backhoe Loader for added machine versatility. Cat hydraulic thumbs are available for even greater versatility. Mechanical thumbs are also available through your Cat dealer.

Loader Performance

Powerful front loader.

Front loader arms deliver more reach, dump height and breakout.

Single Tilt

The standard single tilt loader linkage features strong lift and breakout forces for solid performance in backfilling and truck loading applications with pin-on buckets. The 416F2 is equipped with either a general purpose or multi-purpose pin-on bucket to meet your specific needs.

Return-to-Dig

The return-to-dig system reduces loading cycle times by bringing the loader bucket back to the dig position with an easy pull of the lever. By the time the loader bucket is at ground level, the bucket is angled correctly for the next load or cut.

Work Tools

Do more jobs with one machine.

Backhoe Work Tools

Increase the versatility of your machine with the large selection of backhoe attachments:

- Buckets – Standard Duty, Heavy Duty, Heavy Duty Rock, Soil Excavation, Coral and Ditch Cleaning
- Cold Planers
- Hammers
- Augers
- Rippers
- Thumbs (mechanical and hydraulic)
- Vibratory Plate Compactors
- Quick Couplers

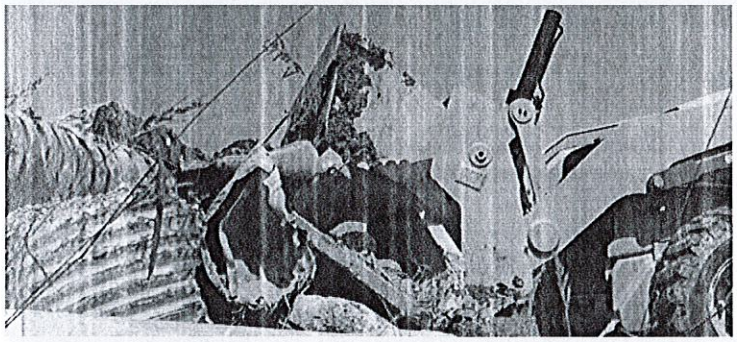

Loader Work Tools

A wide range of loader attachments is available including:

- General Purpose Bucket
- Multi Purpose Bucket
- Side Dump Bucket
- Forks

Diagonal Retention System

Heavy duty bucket teeth are attached with diagonal pins rather than horizontal pins for easy exchange without the use of special tools.

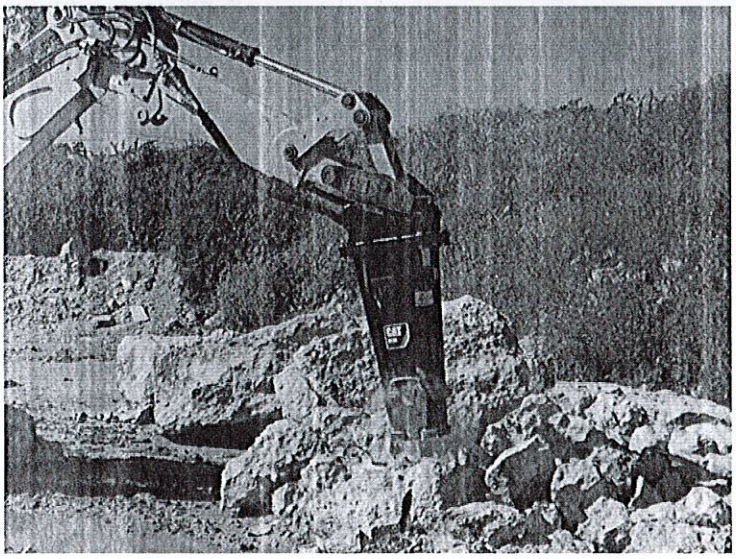

Backhoe Quick Coupler

Manual or hydraulic backhoe couplers make rear tool exchange quick and easy. New Cat dual lock coupler has a self-adjusting wedge design to ensure a tight fit. It also features a safety lock that automatically engages.

Serviceability

Easy maintenance helps keep your machine working.

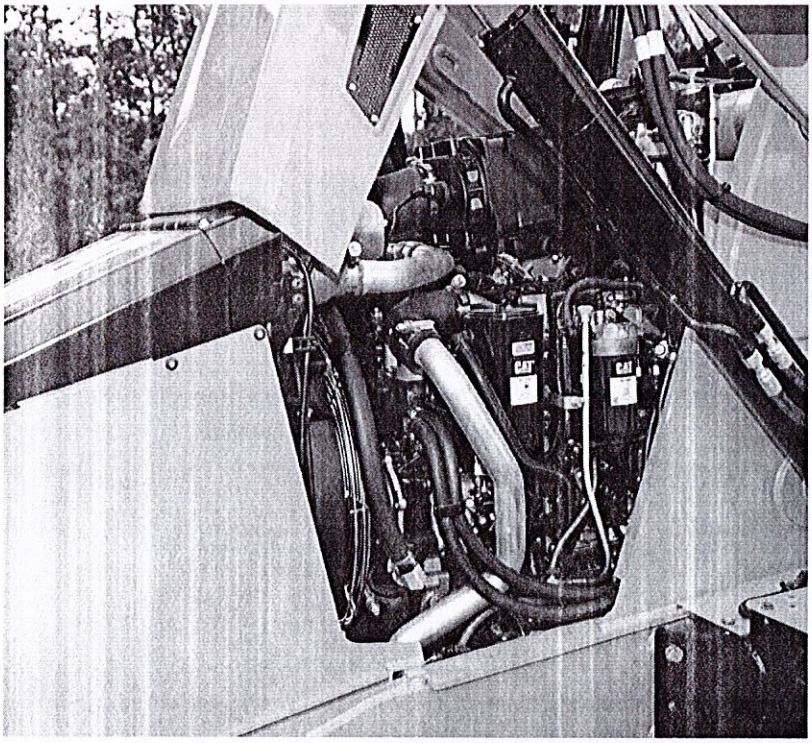

Minimize Your Downtime

Convenient service features make maintenance easy, reducing your downtime:

- Hinged cooling pack provides easy access
- Tilt up hood provides easy, convenient access to all engine check points
- Engine side panels remove easily without the use of tools
- Cat Product Link™ system (optional) provides remote reporting of machine location and operating system parameters

Customer Support

Unmatched support makes the difference.

Renowned Dealer Support

From helping you choose the right machine to knowledgeable ongoing support, Cat dealers provide the best in sales and service.

- Preventive maintenance programs and guaranteed maintenance contracts
- Best-in-class parts availability
- Operator training to help boost your profits
- Genuine Cat Remanufactured parts

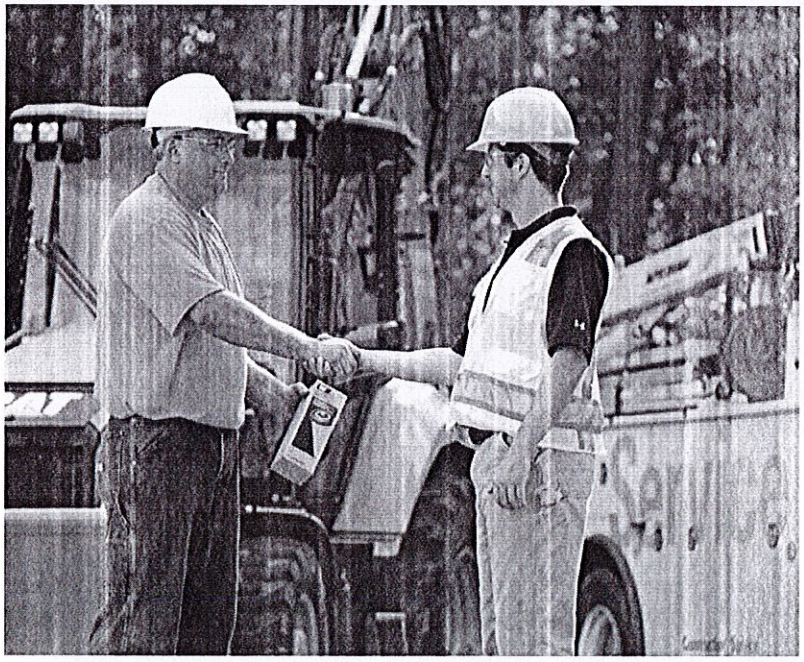

Engine

Engine Model	Cat C4.4 ACERT	
Gross Power		
SAE J1995	71 kW	95 hp
ISO 14396	70 kW	94 hp
Rated Net Power @ 2,200 rpm		
SAE J1349	65 kW	87 hp
ISO 9249	66 kW	88 hp
EEC 80/1269	66 kW	88 hp
Net Peak Power @ 1,800 rpm		
SAE J1349	79 kW	106 hp
ISO 9249	80 kW	107 hp
EEC 80/1269	80 kW	107 hp
Bore	105 mm	4.13 in
Stroke	127 mm	5 in
Displacement	4.4 L	268 in³
Net Torque Rise @ 1,400 rpm – SAE J1349	56%	
Net Peak Torque @ 1,400 rpm	438 N·m	323 lbf-ft

- Engine meets U.S. EPA Tier 4 Final emission standards.
- Net power ratings apply at 2,200 rpm when tested under the specified conditions for the specified standard.
- Net power advertised is the power available at the flywheel when the engine is equipped with fan, air cleaner, muffler and alternator.
- Based on standard air conditions of 25° C (77° F) and 99 kPa (29.32 in) in dry barometer.
- Used 35° API gravity fuel having an LHV of 42 780 kJ/kg (18,390 BTU/lb) when used at 30° C (89° F) (reference a fuel density of 838.9 g/L [7.001 lb/gal]).
- No derating required up to 3000 m (9,843 ft).
- Net torque rise meets SAE J1349.
- Net peak power ratings apply at conditions specified above.

Weights*

Operating Weight – Minimum	7214 kg	15,904 lb
Operating Weight – Maximum (ROPS Capacity)	11 000 kg	24,251 lb
Cab, ROPS/FOPS	163 kg	359 lb
Air Conditioning	46 kg	101 lb
Four Wheel Drive	178 kg	392 lb
MP Bucket (0.96 m³/1.25 yd³) (no forks or teeth)	745 kg	1,642 lb
Extendible Stick	299 kg	659 lb
Counterweights (Option 1)	115 kg	255 lb
Counterweights (Option 2)	240 kg	530 lb
Counterweights (Option 3)	460 kg	1,015 lb

* Specifications shown are for machine equipped with OROPS canopy, 2WD, standard stick, 0.76 m³ (1.0 yd³) general purpose loader bucket, 610 mm (24 in) heavy duty backhoe bucket, 115 kg (255 lb) counterweight, 80 kg (176 lb) operator and full fuel tank.

Transmission

Power Shuttle Transmission – Standard		
Forward – 1st	5.4 km/h	3.4 mph
Forward – 2nd	8.9 km/h	5.5 mph
Forward – 3rd	20 km/h	12 mph
Forward – 4th	36 km/h	23 mph
Reverse – 1st	5.4 km/h	3.4 mph
Reverse – 2nd	8.9 km/h	5.5 mph
Reverse – 3rd	20 km/h	12 mph
Reverse – 4th	36 km/h	23 mph

- Forward/reverse electric power shuttle is controlled by a conveniently placed, hand operated lever that provides instant direction changes between forward and reverse through power hydraulic clutches.
- Torque converter free-wheel clutch allows the converter stator to free-wheel during high speed, low torque conditions such as roading.
- Single-stage, 2.63:1 stall ratio.
- Travel speeds of two wheel drive backhoe loader at full throttle when equipped with 19.5 × 24 rear tires.

Axle Ratings

Front Axle, 2WD		
Static	22 964 kg	50,582 lb
Dynamic	9186 kg	20,233 lb
Front Axle, 4WD		
Static	22 964 kg	50,582 lb
Dynamic	9186 kg	20,233 lb
Rear Axle		
Static	22 964 kg	50,582 lb
Dynamic	9186 kg	20,233 lb

Hydraulic System

Type	Closed Center	
Pump Type	Variable Flow, Axial Piston	
Pump Capacity @ 2,200 rpm	132 L/min	35 gal/min
System Pressure – Backhoe	23 000 kPa	3,336 psi
System Pressure – Loader	23 000 kPa	3,336 psi

Steering

Type	Front Wheel	
Power Steering	Hydrostatic	
Bore	65 mm	2.6 in
Stroke	120 mm	4.7 in
Rod Diameter	36 mm	1.4 in
Axle Oscillation	11°	
Turning Circle – 2WD/4WD (inner wheel not braked)		
Outside, Front Wheels	8.18 m	26'10"
Outside, Widest Loading Bucket	10.97 m	36'0"

416F2 Specifications

Service Refill Capacities

Cooling System with Air Conditioning	22 L	5.8 gal
Fuel Tank	160 L	42 gal
Diesel Exhaust Fluid (DEF)*	19 L	5 gal
Engine Oil with Filter	8.8 L	2.3 gal
Transmission – Power Shuttle		
2WD	15 L	4 gal
4WD	15 L	4 gal
Rear Axle	16.5 L	4.4 gal
Planetaries	1.7 L	0.4 gal
Front Axle (4WD)	11 L	2.9 gal
Planetaries	0.7 L	0.2 gal
Hydraulic System	90 L	23.8 gal
Hydraulic Tank	40 L	10.6 gal

* Must meet the requirements outlined in ISO 22241.
• Requires ultra-low sulfur fuel </= 15 ppm fuel sulfur.

Tires

Choices listed as combination of front/rear tires:
• Front: 11L-16 (12 ply) F-3; Rear: 19.5L-24 (12 ply) R4 ATU
• Front: 12.5/80-18 (12 ply) 1-3; Rear: 19.5L-24 (12 ply) ATU
• Front: 12.5/80-18 NHS (12 ply) 1-3; Rear: 21L-24 (16 ply) R4 ATU
• Front: 340/80R18; Rear: 19.5L-24 (12 ply) R4 ATU

Standards

Brakes	SAE J/ISO 3450; ISO 3450 1996
Cab – ROPS	SAE J1040 MAY94; ISO 3741 1994
Cab – FOPS	SAE J/ISO 3449 APR98 LEVEL II and ISO 3449: 1992 LEVEL II
Cab – Sound	ANSI/SAE J1166 OCT98 is 79 dB(A)
Exterior Sound	SAE J188 JUN86 is 76 dB(A)

Engine Features

• Regeneration is passive and does not require any input from the operator or disrupt work.
• Three-ring pistons made of lightweight, silicon/aluminum alloy for strength and maximum thermal conductivity.
• Forged chrome/molybdenum-steel crankshaft with salt bath nitrocarburized pins and journals.
• Front and rear crankshaft oil seals are "lip" type Viton and PTFE designs featuring an integral dust lip.
• For durability, inlet valves are nitrided, martensitic chrome silicon steel, while exhaust valves are nitrided, austenitic chrome manganese-nickel steel.
• Cylinder block is high strength, cast iron alloy of deep skirt, monobloc design for increased strength and long life.
• Cylinder head is high strength, cast iron alloy construction with extra duty wall and deck thickness. Intake and exhaust ports are precision cast to promote optimum gas flow.
• Direct injection fuel system provides accurate fuel delivery and efficiency.
• Dry-type axial seal air cleaner with integral precleaner, automatic dust ejection system, and filter condition indicator.
• Direct electric, 12-volt starting and charging system with 880 CCA Group 31 maintenance free battery.
• Standard glow plug starting aid system for efficient cold weather starting.
• High contact ratio/gear train, peripheral fixed isolation top cover and open deck block design reduce bare engine noise.
• Higher low end torque for better engine/machine performance.
• Engine is equipped with electric fuel priming pump.

Brakes

Features:
• Brakes meet the following standards: SAE J1473 and ISO 3450 requirements.
• Self-adjusting, completely enclosed and sealed.
• Foot operated brake pedals can be interlocked for roading.
• Parking/secondary brakes are independent of the service brake system. Parking brake is mechanically applied through an adjustable hand lever located on the right console.

Machine Dimensions

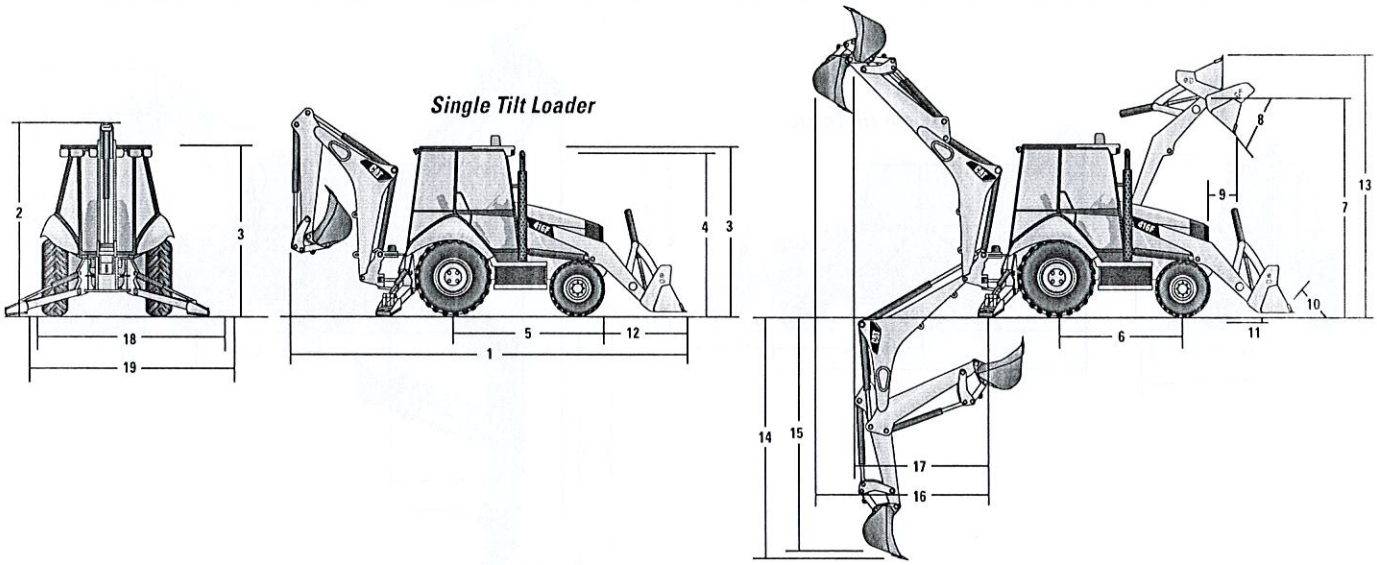

		Single Tilt Loader							
		General Purpose (0.76 m³/1.00 yd³)		General Purpose (0.96 m³/1.25 yd³)		Multi Purpose (1.00 m³/1.31 yd³)		Multi Purpose with Forks (1.00 m³/1.31 yd³)	
1	Overall Length (Loader on Ground) – Standard Stick	7027 mm	23'1"	7140 mm	23'5"	7057 mm	23'2"	7057 mm	23'2"
	Overall Length (Loader on Ground) – Extendible Stick	7033 mm	23'1"	7145 mm	23'5"	7063 mm	23'2"	7063 mm	23'2"
	Overall Transport Length – Standard Stick	7085 mm	23'3"	7168 mm	23'6"	7132 mm	23'5"	7132 mm	23'5"
	Overall Transport Length – Extendible Stick	7091 mm	23'3"	7174 mm	23'6"	7137 mm	23'5"	7137 mm	23'5"
2	Overall Transport Height – Standard Stick	3577 mm	11'9"	3577 mm	11'9"	3577 mm	11'9"	3577 mm	11'9"
	Overall Transport Height – Extendible Stick	3631 mm	11'11"	3631 mm	11'11"	3631 mm	11'11"	3631 mm	11'11"
	Overall Width	2322 mm	7'7"	2322 mm	7'7"	2322 mm	7'7"	2322 mm	7'7"
3	Height to Top of Cab/Canopy	2819 mm	9'3"	2819 mm	9'3"	2819 mm	9'3"	2819 mm	9'3"
4	Height to Top of Exhaust Stack	2744 mm	9'0"	2744 mm	9'0"	2744 mm	9'0"	2744 mm	9'0"
	Height to Loader Hinge Pin (transport)	381 mm	1'3"	381 mm	1'3"	432 mm	1'5"	432 mm	1'5"
	Ground Clearance (minimum)	294 mm	1'0"	294 mm	1'0"	294 mm	1'0"	294 mm	1'0"
5	Rear Axle Centerline to Front Grill	2705 mm	8'10"	2705 mm	8'10"	2705 mm	8'10"	2705 mm	8'10"
	Front Wheel Tread Gauge	1895 mm	6'3"	1895 mm	6'3"	1895 mm	6'3"	1895 mm	6'3"
	Rear Wheel Tread Gauge	1714 mm	5'7"	1714 mm	5'7"	1714 mm	5'7"	1714 mm	5'7"
6	Wheelbase 2WD/AWD	2200 mm	7'3"	2200 mm	7'3"	2200 mm	7'3"	2200 mm	7'3"

Dimensions and performance specifications shown are for machines equipped with 12.5/80-18 SGL front tires, 19.5L-24 IT525 rear tires, ROPS canopy, standard stick with 610 mm (24 in) standard duty bucket, 0.76 m³ (1.00 yd³) loader bucket and standard equipment unless otherwise specified.

416F2 Specifications

Loader Bucket Dimensions and Performance

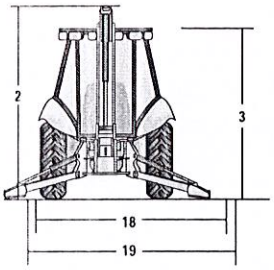

Single Tilt Loader

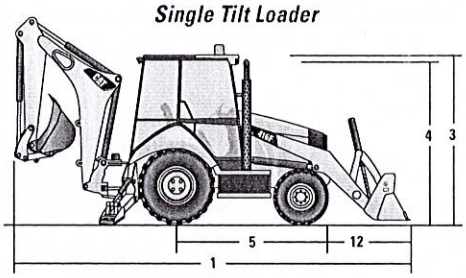

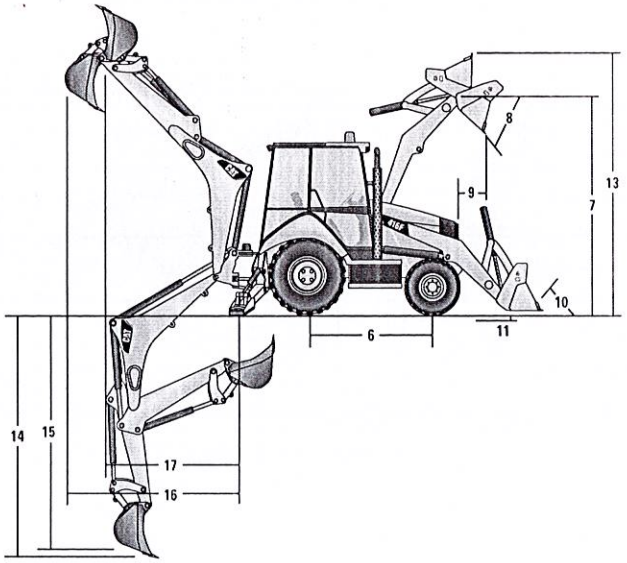

		Single Tilt Loader							
		General Purpose (0.76 m³/1.00 yd³)		General Purpose (0.96 m³/1.25 yd³)		Multi Purpose (1.00 m³/1.31 yd³)		Multi Purpose with Forks (1.00 m³/1.31 yd³)	
	Capacity (SAE rated)	0.76 m³	1.00 yd³	0.96 m³	1.25 yd³	1.00 m³	1.31 yd³	1.00 m³	1.31 yd³
	Overall Bucket Width	2262 mm	89"	2262 mm	89"	2279 mm	90"	2279 mm	90"
	Lift Capacity at Maximum Height	3062 kg	6,751 lb	2964 mm	6,535 lb	2771 kg	6,108 lb	2656 kg	5,855 lb
	Lift Breakout Force	47 919 N	10,772 lbf	45 326 N	10,189 lbf	44 392 N	9,979 lbf	42 904 N	9,645 lbf
	Tilt Breakout Force	54 629 N	12,281 lbf	45 993 N	10,339 lbf	52 674 N	11,841 lbf	51 760 N	11,636 lbf
	Tipping Load at Breakout Point	6831 kg	15,059 lb	6358 kg	14,016 lb	6428 kg	14,172 lb	6286 kg	13,858 lb
7	Maximum Hinge Pin Height	3474 mm	11'5"	3474 mm	11'5"	3474 mm	11'5"	3474 mm	11'5"
8	Dump Angle at Full Height	44°		44°		44°		44°	
	Dump Height at Maximum Angle	2824 mm	9'3"	2746 mm	9'0"	2798 mm	9'2"	2798 mm	9'2"
9	Dump Reach at Maximum Angle	727 mm	2'5"	808 mm	2'8"	716 mm	2'4"	716 mm	2'4"
10	Maximum Bucket Rollback at Ground Level	37°		37°		38°		38°	
11	Digging Depth	83 mm	3"	83 mm	3"	110 mm	4"	110 mm	4"
	Maximum Grading Angle	116°		112°		116°		116°	
	Width of Dozer Cutting Edge	N/A		N/A		2262 mm	7'5"	2262 mm	7'5"
12	Grill to Bucket Cutting Edge, Carry Position	1404 mm	4'7"	1487 mm	4'11"	1451 mm	4'9"	1451 mm	4'9"
13	Maximum Operating Height	4206 mm	13'10"	4355 mm	14'3"	4404 mm	14'5"	4878 mm	16'0"
	Jaw Opening Maximum	N/A		N/A		790 mm	2'7"	790 mm	2'7"
	Bucket Jaw Clamping Force	N/A		N/A		50 600 N	11,375 lbf	50 600 N	11,375 lbf
	Weight (does not include teeth or forks)	384 kg	847 lb	451 kg	994 lb	745 kg	1,642 lb	915 kg	2,017 lb

Dimensions and performance specifications shown are for machines equipped with 12.5/80-18 SGL front tires, 19.5L-24 IT525 rear tires, ROPS canopy, standard stick with 610 mm (24 in) standard duty bucket, 0.76 m³ (1.00 yd³) loader bucket and standard equipment unless otherwise specified.

Backhoe Dimensions and Performance

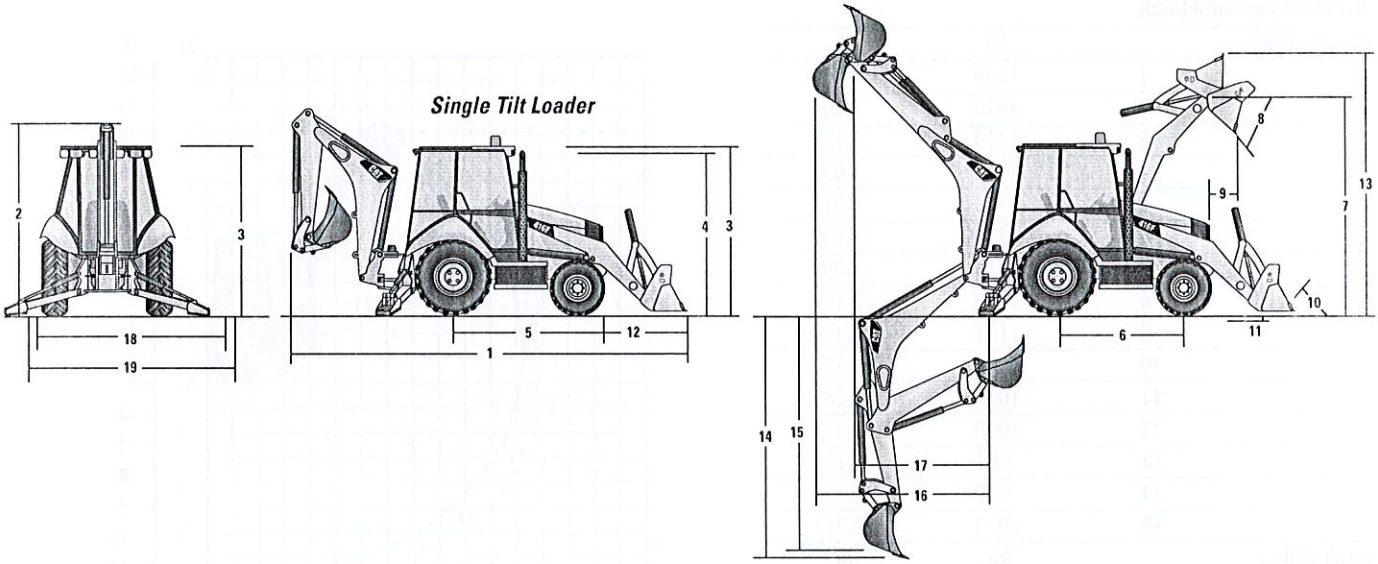

		Standard Stick		E-Stick Retracted		E-Stick Extended	
14	Digging Depth, SAE (maximum)	4348 mm	14'3"	4389 mm	14'5"	5441 mm	17'11"
15	Digging Depth, 610 mm (2 ft) Flat Bottom	4309 mm	14'2"	4350 mm	14'4"	5404 mm	17'10"
	Reach from Rear Axle Centerline at Ground Line	6702 mm	22'1"	6738 mm	22'2"	7742 mm	25'6"
16	Reach from Swing Pivot at Ground Line	5612 mm	18'5"	5648 mm	18'7"	6652 mm	21'10"
	Maximum Operating Height	5525 mm	18'2"	5549 mm	18'3"	6286 mm	20'8"
	Loading Height	3643 mm	11'11"	3600 mm	11'9"	4170 mm	13'7"
17	Loading Reach	1838 mm	6'0"	1925 mm	6'4"	2840 mm	9'4"
	Swing Arc	180°		180°		180°	
	Bucket Rotation	205°		205°		205°	
18	Stabilizer Spread, Operating Position (center)	3310 mm	10'10"	3310 mm	10'10"	3310 mm	10'10"
	Stabilizer Spread, Operating Position (outside)	3770 mm	12'4"	3770 mm	12'4"	3770 mm	12'4"
	Stabilizer Spread, Transport Position	2322 mm	7'7"	2322 mm	7'7"	2322 mm	7'7"
	Bucket Dig Force	59 118 N	13,290 lbf	58 0287 N	13,103 lbf	58 287 N	13,103 lbf
	Stick Dig Force	32 378 N	7,279 lbf	32 421 N	7,289 lbf	23 796 N	5,350 lbf

Dimensions and performance specifications shown are for machines equipped with 12.5/80-18 SGL front tires, 19.5L-24 IT525 rear tires, ROPS canopy, standard stick with 610 mm (24 in) standard duty bucket, 0.76 m³ (1.00 yd³) loader bucket and standard equipment unless otherwise specified.

416F2 Specifications

Backhoe Lift Capacity

Cat 416F2 Standard Stick

Boom Lifting	kg	lb
1	1296	2,851
2	1410	3,101
3	1419	3,123
4	1379	3,033
5	1326	2,917
6	1271	2,797
7	1218	2,680
8	1168	2,569
9	1121	2,466
10	1078	2,372
11	1039	2,286
12	1006	2,213
13	981	2,157
14	979	2,153
15	1073	2,361
Stick Lifting	**kg**	**lb**
16	1312	2,885
17	1849	4,068
18	2307	5,075
19	2400	5,280
20	2790	6,137
21	5561	12,234

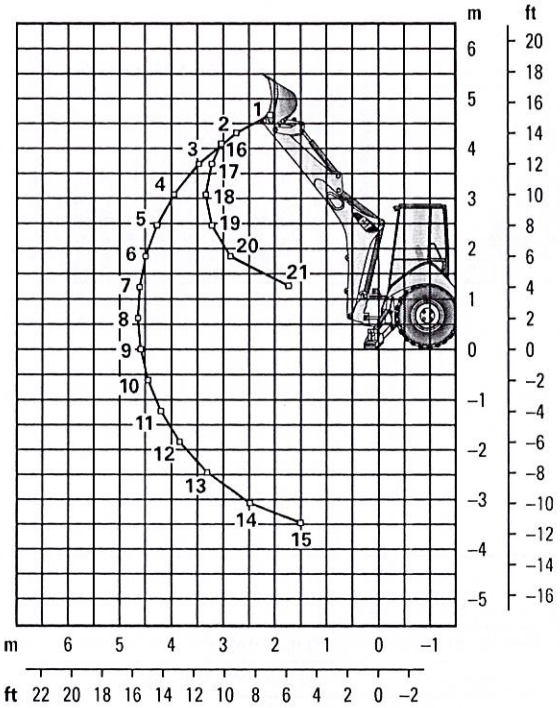

Cat 416F2 Extendible Stick – Retracted

Boom Lifting	kg	lb
1	1117	2,457
2	1214	2,670
3	1212	2,665
4	1166	2,566
5	1111	2,444
6	1054	2,319
7	999	2,197
8	946	2,082
9	897	1,974
10	852	1,873
11	809	1,780
12	771	1,696
13	738	1,623
14	718	1,580
15	767	1,687
Stick Lifting	**kg**	**lb**
16	1169	2,572
17	1694	3,726
18	2107	4,634
19	2183	4,802
20	2533	5,573
21	4983	10,963

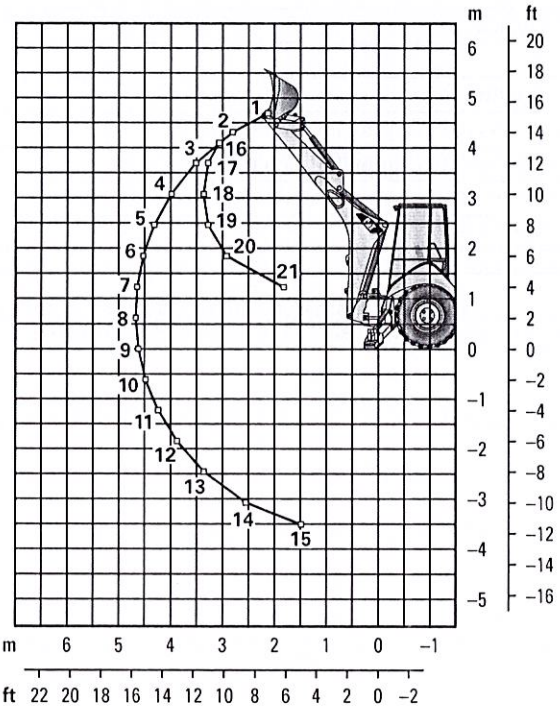

Lift Capacities are over-end values. Machine equipped with 4WD, OROPS, 0.76 m³ (1.00 yd³) general purpose bucket and no counterweight. Extendible stick includes 460 kg (1,015 lb) counterweight.

Backhoe Lift Capacity

Cat 416F2 Extendible Stick – Extended

Boom Lifting	kg	lb
1	617	1,357
2	750	1,650
3	797	1,752
4	802	1,765
5	791	1,741
6	770	1,695
7	750	1,649
8	726	1,597
9	702	1,544
10	679	1,493
11	657	1,445
12	637	1,401
13	620	1,363
14	607	1,334
15	601	1,322
16	612	1,347
17	699	1,537
18	1030	2,267
Stick Lifting	**kg**	**lb**
19	552	1,214
20	735	1,617
21	987	2,171
22	1162	2,556
23	1307	2,876
24	1460	3,212
25	1679	3,694
26	2192	4,823
27	5301	11,662

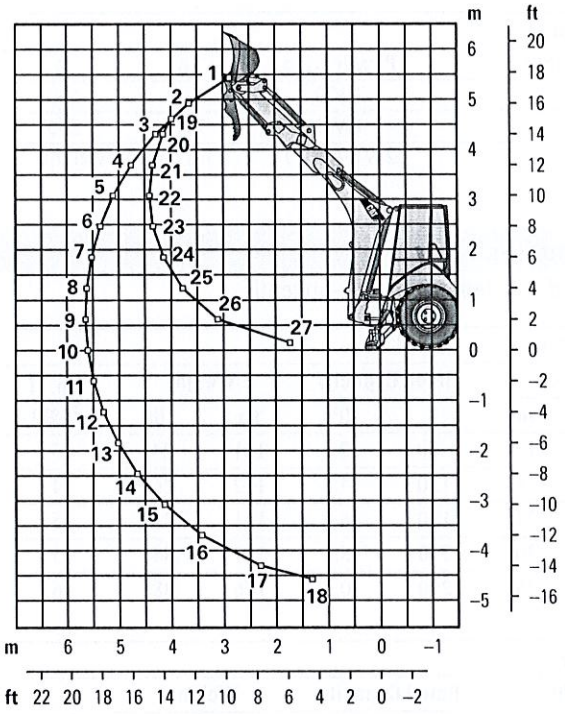

Lift Capacities are over-end values. Machine equipped with 4WD, OROPS, 0.76 m³ (1.00 yd³) general purpose bucket and no counterweight. Extendible stick includes 460 kg (1,015 lb) counterweight.

416F2 Specifications

Counterweights

Minimum Counterweight Recommendations

Standard Stick Loader Bucket	Power Train	kg	lb
GP	2WD	240	530
GP	4WD	115	255
MP	2WD/4WD	no counterweight	

Extendible Stick Loader Bucket	Power Train	kg	lb
GP	2WD/4WD	460	1,015
MP	2WD	240	530
MP	4WD	115	255

Backhoe Buckets

With weld on adapters and pin-on teeth

Standard Duty

Width		Rated Capacity		Weight		No. of Teeth
mm	in	L	ft³	kg	lb	
305	12	80	2.8	111	245	3
457	18	120	4.2	122	268	4
610	24	180	6.2	141	291	5
762	30	230	8.1	157	345	5
914	36	290	10.2	176	388	6

Heavy Duty

Width		Rated Capacity		Weight		No. of Teeth
mm	in	L	ft³	kg	lb	
305	12	80	2.8	121	266	3
406	16	110	3.9	128	282	3
457	18	120	4.2	135	299	4
610	24	180	6.2	151	333	5
762	30	230	8.1	177	391	5
914	36	290	10.2	201	443	6

Soil Excavation

Width		Rated Capacity		Weight		No. of Teeth
mm	in	L	ft³	kg	lb	
457	18	180	6.4	155	341	4
610	24	240	8.5	182	402	5
762	30	320	11.3	206	454	5
914	36	380	13.4	233	513	6

Heavy Duty Rock

Width		Rated Capacity		Weight		No. of Teeth
mm	in	L	ft³	kg	lb	
305	12	70	2.5	127	279	3
457	18	130	4.6	146	322	4
610	24	200	7.0	174	381	5
762	30	270	9.5	197	434	5
914	36	330	11.7	224	493	6

Coral

Width		Rated Capacity		Weight		No. of Teeth
mm	in	L	ft³	kg	lb	
305	12	60	2.1	134	295	4
457	18	100	3.5	155	341	6
610	24	140	4.9	182	402	8
762	30	190	6.7	210	463	10

Heavy Duty – Pin Lock

Width		Rated Capacity		Weight		No. of Teeth
mm	in	L	ft³	kg	lb	
305	12	96	3.4	113	249	3
406	16	123	4.3	131	288	3
457	18	139	4.9	139	307	4
610	24	207	7.3	168	370	5
762	30	275	9.7	194	428	5
914	36	345	12.2	224	494	6

High Capacity – Pin Lock

Width		Rated Capacity		Weight		No. of Teeth
mm	in	L	ft³	kg	lb	
305	12	96	4.6	113	287	3
406	16	123	5.6	131	327	3
457	18	139	6.5	139	346	4
610	24	207	9.6	168	414	5
762	30	275	12.9	194	475	5
914	36	345	16.2	224	543	6

Standard Equipment

Standard equipment may vary. Consult your Cat dealer for details.

- Air cleaner
- Alarm, back-up
- Alternator, 150 amp
- Audible system fault alarm
- Backhoe controls, mechanical two lever
- Battery, maintenance-free, 880 CCA
- Battery disconnect switch
- Battery remote jumpstart
- Boom transport lock
- Brace, lift cylinder
- Brake, secondary parking
- Brakes, hydraulically boosted, oil disc, dual pedals, interlocking
- Bucket level indicator
- Canopy, ROPS/FOPS
- Coat restraint
- Coolant/antifreeze, extended life
- Counterweight, bumper
- Dome light (cab only)
- Diagnostic port for engine
- Differential lock, loader joystick
- Drink holders, two
- Engine, Cat C4.4 ACERT (Direct Injection Turbocharged), meets U.S. EPA Tier 4 Final emission standards, selective catalyst reduction, diesel oxidation catalyst (DOC)
- Engine enclosure, sound suppression removal panels
- Face seals, O-ring
- Fan, suction and guard
- Fast reversing shuttle, all gears
- Fenders, rear
- Filters, spin-on: fuel, engine oil, transmission oil, water separator
- Filters, bowl and cartridge: hydraulic fluid
- Flashing hazards/signal lights
- Floor mat
- Fully hinged front grill for cooling package cleaning access
- Gauge cluster: coolant temperature, fuel level, torque converter temperature, DEF level
- Ground level fuel fill and DEF fill
- High ambient cooling package
- Hood lock, inside cab
- Hydraulic hose, XT™
- Hydraulic oil cooler
- Hydraulic oil level sight gauge
- Hydraulic valve, hydrostatic steering
- Hydraulic valves, loader 2 function
- Hydraulic valves, backhoe 4 function
- Hydraulics, load sensing with variable displacement piston pump
- Indicator lights: Eco mode active, water in fuel, remote dial throttle active, engine warning, warning lamp, emissions module malfunction, AESC active, low battery/charging system warning, high hydraulic oil temperature; LCD warnings: engine oil pressure, machine locked (if equipped), service due, air filter blocked, high coolant temperature, auto idle shutdown, high torque converter temperature, hydraulic filter bypass
- Instrument panel lights
- Key start/stop system
- LCD screen: engine speed, hour meter, gear/direction, battery voltage, hydraulic oil temperature, torque converter temperature, coolant temperature, trip totals (fuel and hours), lifetime totals (fuel and hours), operator settings (units, brightness, programmable hoe auxiliary flow), service mode diagnostics, oil life reset, DPF force regeneration, maintenance intervals, ECM/system info
- Lights, working (2 front, 2 rear)
- Loader, self-leveling, return-to-dig and transmission disconnect switch
- Loader, single tilt
- Mechanical two lever controls
- Mirror, rearview
- Open circuit breather
- Power receptacle, 12 volt, 2 internal, 1 external
- Power steering, hydrostatic
- Seat belt, retractable, 51 mm (2 in)
- Socket, two roof
- Stabilizer shoes, street
- Steering knob
- Seat, air suspension, fabric or vinyl cover, with armrest
- Starting system, glow plugs
- Steering, hydrostatic
- Storage compartment, lockable
- Storage tray
- Stop and tail lights
- Swing transport lock
- Tilt steering column
- Tires
- Toolbox, external, lockable
- Torque converter
- Throttle, hand and foot, electronic
- Transmission, four speed, syncromesh
- Transmission neutralizer switch
- Transport tie-downs
- Two Wheel Drive
- Vandalism locks
- Warning horn, electric

416F2 Optional Equipment

Optional Equipment

Optional equipment may vary. Consult your Cat dealer for details.

- Backhoe controls, pilot joysticks
- Battery, additional, 880 CCA
- Cab, standard
- Cold weather fuel (–30° C/–22° F)
- Cold weather package, including additional battery, engine block heater, radiator antifreeze (–50° C/–58° F), cold weather fuel (–30° C/–22° F) and mounting for an ether bottle
- Counterweights, 115 kg (255 lb), 240 kg (530 lb) or 460 kg (1,015 lb)
- Fenders, front with integral steps
- Four Wheel Drive
- Guard, boom protection plate
- Guard, stabilizer, rock
- Hydraulic valves, loader (3rd valve for GP, MP or Quick Coupler)
- Hydraulic valves, backhoe (5th and 6th function)
- Hydraulic lines, combined function auxiliary
- Product Link, satellite, PL631E
- Product Link, cellular, PL641I
- Quick Coupler, hydraulic, dual lock
- Quick Coupler, manual, dual lock
- Quick Coupler, pin lock
- Radio and CD player
- Radio and CD player, Bluetooth
- Ride Control
- Rotating beacon, magnetic mount
- Seat belt, 75 mm (3 in)
- Security system keypad
- Stabilizer pads, grouser type
- Stabilizer pads, reversible
- Stick, extendible
- Storage box
- Vandalism protection, gauge cover
- Work Tool Attachments such as buckets, forks, material handling arms, augers, hammers, brooms, cold planers and vibratory plate compactors. See your Cat dealer for more information.

Notes

For more complete information on Cat products, dealer services, and industry solutions, visit us on the web at **www.cat.com**

AEHQ7458 (06-2015)
(NACD)

© 2015 Caterpillar
All rights reserved

Materials and specifications are subject to change without notice. Featured machines in photos may include additional equipment. See your Cat dealer for available options.

CAT, CATERPILLAR, SAFETY.CAT.COM, their respective logos, "Caterpillar Yellow" and the "Power Edge" trade dress, as well as corporate and product identity used herein, are trademarks of Caterpillar and may not be used without permission.

Effective with sales to the first user on or after June 1, 2015

CATERPILLAR LIMITED WARRANTY

For Selected Machine Models Designated by Caterpillar with 12 Month/Unlimited Hour Warranty

Worldwide

Caterpillar Inc. or any of its subsidiaries ("Caterpillar") warrants the following products sold by it to be free from defects in material and workmanship:

- New earthmoving, construction, material handling, forestry product, paving product, compact wheel loader, mini hydraulic excavator, skid steer loader, multi terrain loader, and compact track loader machines designated by Caterpillar as having 12 -months/unlimited hour warranty. See your Cat® dealer for a complete listing of covered models.
- Attachments/work tools installed on such machines prior to delivery (unless covered by the Cat Work Tool warranty statement or another manufacturer's warranty). Hammer tool points and compacting plates used on hydraulic hammers are not warranted.

An additional warranty against breakage is applicable to certain Cat ground engaging tools. An additional warranty against wear is applicable to all landfill compactor tips when used in residential waste landfills. Refer to the applicable warranty statements for coverage detail.

This warranty does not apply to:

- Cat Batteries
- Mobil-trac belts, rubber tracks used on multi terrain loaders, compact track loaders, and mini hydraulic excavators
- Cat Work Tools
- Select models designated by Caterpillar that are sold in India and China

These products are covered by other Caterpillar warranties.

This warranty is subject to the following:

Warranty Period

For new machines and work tools/attachments the warranty period is 12-months/unlimited hours, starting from date of delivery to the first user.

Note:

- For hydraulic line's quick connect/disconnect components sold on compact wheel loaders, mini hydraulic excavators, skid steer loaders, multi terrain loaders, and compact track loader machines, the warranty period is 50 hours starting from the date of delivery to the first user.
- For Draglines, Electric Rope Shovels, Hard Rock Movers, Hard Rock Feeders; the warranty period is not to exceed 24 months from shipment of the last major component from the Caterpillar place of manufacture.

Caterpillar Responsibilities

If a defect in material or workmanship is found during the warranty period, Caterpillar will, during normal working hours and at a place of business of a Cat dealer or other source approved by Caterpillar:

- Provide (at Caterpillar's choice) new, remanufactured, or Caterpillar approved repaired parts or assembled components needed to correct the defect.

  Note: New, remanufactured, or Caterpillar approved replacement parts provided under the terms of this warranty are warranted for the remainder of the warranty period applicable to the product in which installed as if such parts were original components of that product. Items replaced under this warranty become the property of Caterpillar.
- Replace lubricating oil, filters, antifreeze, and other service items made unusable by the defect.
- Provide reasonable and customary labor needed to correct the defect.

User Responsibilities

The user is responsible for:

- Providing proof of delivery date to the first user.
- Labor costs, except as stated under "Caterpillar Responsibilities."
- Transportation costs, except as stated under "Caterpillar Responsibilities."
- Premium or overtime labor costs.
- Parts shipping charges in excess of those that are considered usual and customary.
- Local taxes, if applicable.
- Costs to investigate complaints, unless the problem is caused by a defect in Caterpillar material or workmanship.
- Giving timely notice of a warrantable failure and promptly making the product available for repair.
- Performance of the required maintenance (including use of proper fuel, oil, lubricants, and coolant) and items replaced due to normal wear and tear.
- Allowing Caterpillar access to all electronically stored data.

Limitations

Caterpillar is not responsible for:

- Failures resulting from any use or installation that Caterpillar judges improper.
- Failures resulting from attachments, accessory items, and parts not sold or approved by Caterpillar.
- Failures resulting from abuse, neglect, and/or improper storage or repair.
- Failures resulting from user's delay in making the product available after being notified of a potential product problem.
- Failures resulting from unauthorized repair or adjustments, and unauthorized fuel setting changes.

(Continued on the reverse side....)

This warranty covers every major component of the products. Claims under this warranty should be submitted to a place of business of a Cat dealer or other source approved by Caterpillar. For further information concerning either the location to submit claims or Caterpillar as the issuer of this warranty, write Caterpillar Inc., 100 N. E. Adams St., Peoria, IL USA 61629.

Caterpillar's obligations under this Limited Warranty are subject to, and shall not apply in contravention of, the laws, rules, regulations, directives, ordinances, orders, or statutes of the United States, or of any other applicable jurisdiction, without recourse or liability with respect to Caterpillar.

A) For products operating outside of Australia, Fiji, Nauru, New Caledonia, New Zealand, Papua New Guinea, the Solomon Islands, and Tahiti, the following is applicable:

NEITHER THE FOREGOING EXPRESS WARRANTY NOR ANY OTHER WARRANTY BY CATERPILLAR, EXPRESS OR IMPLIED, IS APPLICABLE TO ANY ITEM CATERPILLAR SELLS THAT IS WARRANTED DIRECTLY TO THE USER BY ITS MANUFACTURER.

THIS WARRANTY IS EXPRESSLY IN LIEU OF ANY OTHER WARRANTIES, EXPRESS OR IMPLIED, INCLUDING ANY WARRANTY OF MERCHANTABILITY OR FITNESS FOR A PARTICULAR PURPOSE, EXCEPT CATERPILLAR EMISSION-RELATED COMPONENTS WARRANTY FOR NEW ENGINES, WHERE APPLICABLE. REMEDIES UNDER THIS WARRANTY ARE LIMITED TO THE PROVISION OF MATERIAL AND SERVICES, AS SPECIFIED HEREIN.

CATERPILLAR IS NOT RESPONSIBLE FOR INCIDENTAL OR CONSEQUENTIAL DAMAGES.

CATERPILLAR EXCLUDES ALL LIABILITY FOR OR ARISING FROM ANY NEGLIGENCE ON ITS PART OR ON THE PART OF ANY OF ITS EMPLOYEES, AGENTS, OR REPRESENTATIVES IN RESPECT OF THE MANUFACTURE OR SUPPLY OF GOODS OR THE PROVISION OF SERVICES RELATING TO THE GOODS.

IF OTHERWISE APPLICABLE, THE VIENNA CONVENTION ON CONTRACTS FOR THE INTERNATIONAL SALE OF GOODS IS EXCLUDED IN ITS ENTIRETY.

B) For products operating in Australia. Fiji, Nauru, New Caledonia, New Zealand, Papua New Guinea, the Solomon Islands, and Tahiti, the following is applicable:

THIS WARRANTY IS IN ADDITION TO WARRANTIES AND CONDITIONS IMPLIED BY STATUTE AND OTHER STATUTORY RIGHTS AND OBLIGATIONS THAT BY ANY APPLICABLE LAW CANNOT BE EXCLUDED, RESTRICTED OR MODIFIED ("MANDATORY RIGHTS"). ALL OTHER WARRANTIES OR CONDITIONS, EXPRESS OR IMPLIED (BY STATUTE OR OTHERWISE), ARE EXCLUDED. WITHOUT LIMITING THE FOREGOING PROVISIONS OF THIS PARAGRAPH, WHERE A PRODUCT IS SUPPLIED FOR BUSINESS PURPOSES, THE CONSUMER GUARANTEES UNDER THE CONSUMER GUARANTEES ACT 1993 (NZ) WILL NOT APPLY.

NEITHER THIS WARRANTY NOR ANY OTHER CONDITION OR WARRANTY BY CATERPILLAR, EXPRESS OR IMPLIED (SUBJECT ONLY TO THE MANDATORY RIGHTS), IS APPLICABLE TO ANY ITEM CATERPILLAR SELLS THAT IS WARRANTED DIRECTLY TO THE USER BY ITS MANUFACTURER.

IF THE MANDATORY RIGHTS MAKE CATERPILLAR LIABLE IN CONNECTION WITH SERVICES OR GOODS, THEN TO THE EXTENT PERMITTED UNDER THE MANDATORY RIGHTS, THAT LIABILITY SHALL BE LIMITED AT CATERPILLAR'S OPTION TO (a) IN THE CASE OF SERVICES, THE SUPPLY OF THE SERVICES AGAIN OR THE PAYMENT OF THE COST OF HAVING THE SERVICES SUPPLIED AGAIN AND (b) IN THE CASE OF GOODS, THE REPAIR OR REPLACEMENT OF THE GOODS, THE SUPPLY OF EQUIVALENT GOODS, THE PAYMENT OF THE COST OF SUCH REPAIR OR REPLACEMENT OR THE ACQUISITION OF EQUIVALENT GOODS.

CATERPILLAR EXCLUDES ALL LIABILITY FOR OR ARISING FROM ANY NEGLIGENCE ON ITS PART OR ON THE PART OF ANY OF ITS EMPLOYEES, AGENTS OR REPRESENTATIVES IN RESPECT OF THE MANUFACTURE OR SUPPLY OF GOODS OR THE PROVISION OF SERVICES RELATING TO THE GOODS.

CATERPILLAR IS NOT LIABLE FOR INCIDENTAL OR CONSEQUENTIAL DAMAGES UNLESS IMPOSED UNDER MANDATORY RIGHTS. IF OTHERWISE APPLICABLE, THE VIENNA CONVENTION (CONTRACTS FOR THE INTERNATIONAL SALE OF GOODS) IS EXCLUDED IN ITS ENTIRETY.

C) For products supplied in Australia:

IF THE PRODUCTS TO WHICH THIS WARRANTY APPLIES ARE:

I. PRODUCTS OF A KIND ORDINARILY ACQUIRED FOR PERSONAL, DOMESTIC OR HOUSEHOLD USE OR CONSUMPTION; OR

II. PRODUCTS THAT COST AUD 40,000 OR LESS,

WHERE THOSE PRODUCTS WERE NOT ACQUIRED FOR THE PURPOSE OF RE-SUPPLY OR FOR THE PURPOSE OF USING THEM UP OR TRANSFORMING THEM IN THE COURSE OF PRODUCTION OR MANUFACTURE OR IN THE COURSE OF REPAIRING OTHER GOODS OR FIXTURES, THEN THIS SECTION C APPLIES.

THE FOLLOWING MANDATORY TEXT IS INCLUDED PURSUANT TO THE AUSTRALIAN CONSUMER LAW AND INCLUDES REFERENCES TO RIGHTS THE USER MAY HAVE AGAINST THE DIRECT SUPPLIER OF THE PRODUCTS: OUR GOODS COME WITH GUARANTEES THAT CANNOT BE EXCLUDED UNDER THE AUSTRALIAN CONSUMER LAW. YOU ARE ENTITLED TO A REPLACEMENT OR REFUND FOR A MAJOR FAILURE AND COMPENSATION FOR ANY OTHER REASONABLY FORESEEABLE LOSS OR DAMAGE. YOU ARE ALSO ENTITLED TO HAVE THE GOODS REPAIRED OR REPLACED IF THE GOODS FAIL TO BE OF ACCEPTABLE QUALITY AND THE FAILURE DOES NOT AMOUNT TO A MAJOR FAILURE. THE INCLUSION OF THIS TEXT DOES NOT CONSTITUTE ANY REPRESENTATION OR ACCEPTANCE BY CATERPILLAR OF LIABILITY TO THE USER OR ANY OTHER PERSON IN ADDITION TO THAT WHICH CATERPILLAR MAY HAVE UNDER THE AUSTRALIAN CONSUMER LAW.

TO THE EXTENT THE PRODUCTS FALL WITHIN THIS SECTION C BUT ARE NOT OF A KIND ORDINARILY ACQUIRED FOR PERSONAL, DOMESTIC OR HOUSEHOLD USE OR CONSUMPTION, CATERPILLAR LIMITS ITS LIABILITY TO THE EXTENT IT IS PERMITTED TO DO SO UNDER THE AUSTRALIAN CONSUMER LAW TO, AT ITS OPTION, THE REPAIR OR REPLACEMENT OF THE PRODUCTS, THE SUPPLY OF EQUIVALENT PRODUCTS, OR THE PAYMENT OF THE COST OF SUCH REPAIR OR REPLACEMENT OR THE ACQUISITION OF EQUIVALENT PRODUCTS.

THE WARRANTY SET OUT IN THIS DOCUMENT IS GIVEN BY CATERPILLAR INC. OR ANY OF ITS SUBSIDIARIES, 100 N. E. ADAMS ST, PEORIA, IL USA 61629, TELEPHONE 1 309 675 1000,THE USER IS RESPONSIBLE FOR ALL COSTS ASSOCIATED WITH MAKING A CLAIM UNDER THE WARRANTY SET OUT IN THIS DOCUMENT, EXCEPT AS EXPRESSLY STATED OTHERWISE IN THIS DOCUMENT, AND THE USER IS REFERRED TO THE BALANCE OF THE DOCUMENT TERMS CONCERNING CLAIM PROCEDURES, CATERPILLAR RESPONSIBILITIES AND USER RESPONSIBILITIES.

TO THE EXTENT PERMISSIBLE BY LAW, THE TERMS SET OUT IN THE REMAINDER OF THIS WARRANTY DOCUMENT (INCLUDING SECTION B) CONTINUE TO APPLY TO PRODUCTS TO WHICH THIS SECTION C APPLIES.

©2014 Caterpillar All Rights Reserved.CAT, CATERPILLAR, their respective logos, "Caterpillar Yellow," the "Power Edge" trade dress as well as corporate and product identity used herein, are trademarks of Caterpillar and may not be used without permission.

CONTROL YOUR COSTS MINIMIZE YOUR RISKS

This plan safeguards your investments in new, used and rebuilt machines beyond the standard warranty period. It includes all parts and labor to protect you against failures caused by defects in materials and workmanship. With the Powertrain Equipment Protection Plan, you can increase the predictability of service and maintenance costs—and reduce unplanned downtime.

WHAT WE DO

- Perform necessary inspections to confirm eligibility
- Install parts approved by Caterpillar on covered repairs
- Validate your enrollment in the program

WHAT YOU DO

- Operate equipment according to the Cat Operation & Maintenance Manual (OMM)
- Have recommended preventive maintenance performed at intervals specified in the OMM
- Upon request, provide proof of preventive maintenance compliance (receipts, copies of work orders, invoices)
- Promptly provide the machine for repair in the event of a covered failure

COVERED COMPONENTS

Engine & Accessories

Engine - Internal Components
Oil Cooler
Manifolds
Fan Motor
Water Pump
Fuel Injection Pumps
Injectors
Lift / Transfer Pump
Senders / Solenoids / Sensors
Thermostat
Flywheel & Torque Converter
Engine Oil Filter Mount
Turbocharger
AC Compressor / Condenser
Electronic Control Modules
Oil Hoses / Lines (non-hydrostatic)
Cylinder Block
Piston
Piston Rings
Piston & Connecting Rod
Crankshaft, Main Bearings & Rod Bearings
Camshaft & Camshaft Bearings
Timing / Accessory Gears
Timing Chain / Belt
Inlet / Exhaust Valve
Valve Cover & Base
Valve Spring & Guide
Rocker Arm
Rocker Shaft Assembly
Push Rod
Balancer
Fuel Pump / Governor Drive
Oil Pump
Oil Pan Group
Fan & Fan Drive

Transmission

Transmissions
Hydraulic Controls
Transmission Oil Filter Base
Transmission Gears
Final Drives/Planetary
Drive Shafts
Transfer Case
Hydrostatic Pumps & Drive Motors
Linkage / lines Connected to Hystat Pump
Drive (pilot / eh) Control Valves
Bevel and Transfer Case

Drive Line/Drive Axle

Axles
Axle Seals
Final Drive & Wheel
Final Drive Case / Bore
Final Drive Chain
Final Drive Gears
Axle Shaft
Drive Axle Oil Pump

Steering

Steering Clutch
Steering Clutch & Brake Control Valve

Hydraulic Systems

Hydraulic Oil Coolers

EXCLUSIONS

If a component is not listed, it may not be included in the plan. Other exclusions include:

> Improper or abusive use of the machine

> Lubricating oil, antifreeze, filters, consumables and other maintenance items replaced during the covered component repair, unless such items are rendered unusable by a covered component failure

> Failures caused by normal wear-out

> Freight charges for parts shipments

> Travel time and mileage involved in getting to a job site

> Hauling costs and / or retrieval costs

> Overtime labor costs

> Repair costs resulting from the failure of any non-covered components

> Downtime loss

> Equipment rental charges

> Any incidental / consequential damages or costs incurred as a result of a covered component failure.

> Modifications unless approved by Caterpillar

Examples of covered and excluded components or items are listed here. The actual dealer contract will govern. For a complete list of included components and more information on Cat Equipment Protection Plans, contact your local Cat dealer.

E-Verify

Employment Eligibility Verification

Welcome Teresa Morton | User ID TMOR9402 | Last Login 09:22 AM - 01/06/2012 | Log Out

Click any ⓘ for help

- Home
- My Cases
- New Case
- View Cases
- Search Cases
- My Profile
- Edit Profile
- Change Password
- Change Security Questions
- My Company
- Edit Company Profile
- Add New User
- View Existing Users
- Close Company Account
- My Reports
- View Reports
- My Resources
- View Essential Resources
- Take Tutorial
- View User Manual
- Contact Us

Company Information

Company Name:	Thompson Tractor Co., Inc.	View / Edit
Company ID Number:	47130	
Doing Business As (DBA) Name:		
DUNS Number:		

Physical Location:

Address 1:	2401 Pinson Highway
Address 2:	
City:	Birmingham
State:	AL
Zip Code:	35217
County:	JEFFERSON

Mailing Address:

Address 1:	P O. Box 10367
Address 2:	
City:	Birmingham
State:	AL
Zip Code:	35202-0367

Additional Information:

Employer Identification Number:	630377478
Total Number of Employees:	1,000 to 2,499
Parent Organization:	
Administrator:	

Organization Designation:

Employer Category:

NAICS Code:	423 - MERCHANT WHOLESALERS, DURABLE GOODS	View / Edit
Total Hiring Sites:	40	View / Edit
Total Points of Contact:	3	View / Edit

View MOU

Form **W-9**
(Rev. October 2007)
Department of the Treasury
Internal Revenue Service

Request for Taxpayer Identification Number and Certification

Give form to the requester. Do not send to the IRS.

Print or type
See Specific Instructions on page 2.

Name (as shown on your income tax return)
Thompson Tractor Co., Inc. DBA Thompson Power Systems, Thompson Lift Truck Co.

Business name, if different from above
and The Cat Rent Store

Check appropriate box: ☐ Individual/Sole proprietor ☒ Corporation ☐ Partnership
☐ Limited liability company. Enter the tax classification (D=disregarded entity, C=corporation, P=partnership) ▶ .....
☐ Other (see instructions) ▶

☒ Exempt payee

Address (number, street, and apt. or suite no.)
P O Box 10367 2401 Pinson Hwy. Tarrant, AL 35217

Requester's name and address (optional)

City, state, and ZIP code
Birmingham, AL 35202-0367

List account number(s) here (optional)
Lockbox Remit To: P O Box 934065, Atlanta, GA 31193-4005

Part I Taxpayer Identification Number (TIN)

Enter your TIN in the appropriate box. The TIN provided must match the name given on Line 1 to avoid backup withholding. For individuals, this is your social security number (SSN). However, for a resident alien, sole proprietor, or disregarded entity, see the Part I instructions on page 3. For other entities, it is your employer identification number (EIN). If you do not have a number, see *How to get a TIN* on page 3.

Note. If the account is in more than one name, see the chart on page 4 for guidelines on whose number to enter.

Social security number
: :

or

Employer identification number
63 : 0377478

Part II Certification

Under penalties of perjury, I certify that:

1. The number shown on this form is my correct taxpayer identification number (or I am waiting for a number to be issued to me), and
2. I am not subject to backup withholding because: (a) I am exempt from backup withholding, or (b) I have not been notified by the Internal Revenue Service (IRS) that I am subject to backup withholding as a result of a failure to report all interest or dividends, or (c) the IRS has notified me that I am no longer subject to backup withholding, and
3. I am a U.S. citizen or other U.S. person (defined below).

Certification instructions. You must cross out item 2 above if you have been notified by the IRS that you are currently subject to backup withholding because you have failed to report all interest and dividends on your tax return. For real estate transactions, item 2 does not apply. For mortgage interest paid, acquisition or abandonment of secured property, cancellation of debt, contributions to an individual retirement arrangement (IRA), and generally, payments other than interest and dividends, you are not required to sign the Certification, but you must provide your correct TIN. See the instructions on page 4.

Sign Here Signature of U.S. person ▶ Linda K. Duncan, Controller Date ▶

General Instructions

Section references are to the Internal Revenue Code unless otherwise noted.

Purpose of Form

A person who is required to file an information return with the IRS must obtain your correct taxpayer identification number (TIN) to report, for example, income paid to you, real estate transactions, mortgage interest you paid, acquisition or abandonment of secured property, cancellation of debt, or contributions you made to an IRA.

Use Form W-9 only if you are a U.S. person (including a resident alien), to provide your correct TIN to the person requesting it (the requester) and, when applicable, to:

1. Certify that the TIN you are giving is correct (or you are waiting for a number to be issued),

2. Certify that you are not subject to backup withholding, or

3. Claim exemption from backup withholding if you are a U.S. exempt payee. If applicable, you are also certifying that as a U.S. person, your allocable share of any partnership income from a U.S. trade or business is not subject to the withholding tax on foreign partners' share of effectively connected income.

Note. If a requester gives you a form other than Form W-9 to request your TIN, you must use the requester's form if it is substantially similar to this Form W-9.

Definition of a U.S. person. For federal tax purposes, you are considered a U.S. person if you are:

- An individual who is a U.S. citizen or U.S. resident alien,
- A partnership, corporation, company, or association created or organized in the United States or under the laws of the United States,
- An estate (other than a foreign estate), or
- A domestic trust (as defined in Regulations section 301.7701-7).

Special rules for partnerships. Partnerships that conduct a trade or business in the United States are generally required to pay a withholding tax on any foreign partners' share of income from such business. Further, in certain cases where a Form W-9 has not been received, a partnership is required to presume that a partner is a foreign person, and pay the withholding tax. Therefore, if you are a U.S. person that is a partner in a partnership conducting a trade or business in the United States, provide Form W-9 to the partnership to establish your U.S. status and avoid withholding on your share of partnership income.

The person who gives Form W-9 to the partnership for purposes of establishing its U.S. status and avoiding withholding on its allocable share of net income from the partnership conducting a trade or business in the United States is in the following cases:

- The U.S. owner of a disregarded entity and not the entity,

the Employer issues a tentative nonconfirmation based upon a photo non-match. The Employer will determine whether the employee contests the tentative nonconfirmation as soon as possible after the Employer receives it.

4. If the employee contests a tentative nonconfirmation issued by DHS, the Employer will provide the employee with a referral letter and instruct the employee to contact the Department through its toll-free hotline within 8 Federal Government work days.

5. If the employee contests a tentative nonconfirmation based upon a photo non-match, the Employer will provide the employee with a referral letter to DHS. DHS will electronically transmit the result of the referral to the Employer within 10 Federal Government work days of the referral unless it determines that more than 10 days is necessary.

6. The Employer agrees that if an employee contests a tentative nonconfirmation based upon a photo non-match, the Employer will send a copy of the employee's Form I-551 or Form I-766 to DHS for review by:

- Scanning and uploading the document, or
- Sending a photocopy of the document by an express mail account (furnished and paid for by DHS).

7. The Employer understands that if it cannot determine whether there is a photo match/non-match, the Employer is required to forward the employee's documentation to DHS by scanning and uploading, or by sending the document as described in the preceding paragraph, and resolving the case as specified by the Immigration Services Verifier at DHS who will determine the photo match or non-match.

ARTICLE IV

SERVICE PROVISIONS

The SSA and DHS will not charge the Employer for verification services performed under this MOU. The Employer is responsible for providing equipment needed to make inquiries. To access the E-Verify System, an Employer will need a personal computer with Internet access.

ARTICLE V

PARTIES

This MOU is effective upon the signature of all parties, and shall continue in effect for as long as the SSA and DHS conduct the E-Verify program unless modified in writing by the mutual consent of all parties, or terminated by any party upon 30 days prior written notice to the others. Any and all system enhancements to the E-Verify program by DHS or SSA, including but not limited to the E-Verify checking against additional data sources and instituting new verification procedures, will be covered under this MOU and will not cause the need for a supplemental MOU that outlines these changes. DHS agrees to train employers on all changes made to E-Verify through the use of mandatory refresher tutorials and updates to the E-Verify manual. Even

without changes to E-Verify, the Department reserves the right to require employers to take mandatory refresher tutorials.

Termination by any party shall terminate the MOU as to all parties. The SSA or DHS may terminate this MOU without prior notice if deemed necessary because of the requirements of law or policy, or upon a determination by SSA or DHS that there has been a breach of system integrity or security by the Employer, or a failure on the part of the Employer to comply with established procedures or legal requirements. Some or all SSA and DHS responsibilities under this MOU may be performed by contractor(s), and SSA and DHS may adjust verification responsibilities between each other as they may determine.

Nothing in this MOU is intended, or should be construed, to create any right or benefit, substantive or procedural, enforceable at law by any third party against the United States, its agencies, officers, or employees, or against the Employer, its agents, officers, or employees.

Each party shall be solely responsible for defending any claim or action against it arising out of or related to E-Verify or this MOU, whether civil or criminal, and for any liability wherefrom, including (but not limited to) any dispute between the Employer and any other person or entity regarding the applicability of Section 403(d) of IIRIRA to any action taken or allegedly taken by the Employer.

The employer understands that the fact of its participation in E-Verify is not confidential information and may be disclosed as authorized or required by law and DHS or SSA policy, including but not limited to, Congressional oversight, E-Verify publicity and media inquiries, and responses to inquiries under the Freedom of Information Act (FOIA).

The foregoing constitutes the full agreement on this subject between the SSA, DHS, and the Employer.

The individuals whose signatures appear below represent that they are authorized to enter into this MOU on behalf of the Employer and DHS respectively.

To be accepted as a participant in E-Verify, you should only sign the Employer's Section of the signature page. If you have any questions, contact E-Verify Operations at 888-464-4218.

Employer Thompson Tractor Co., Inc.

Frank M Wright	
Name (Please type or print)	Title
Electronically Signed	**07/11/2007**
Signature	Date

Department of Homeland Security – Verification Division

Company ID Number: 47130

INFORMATION REQUIRED
FOR THE E-VERIFY PROGRAM

Information relating to your Company:

Company Name: **Thompson Tractor Co., Inc.**

Company Facility Address: **2401 Pinson Highway**
Birmingham, AL 35217

Company Alternate Address: **P.O. Box 10367**
Birmingham, AL 35202-0367

County or Parish: **JEFFERSON**

Employer Identification Number: **630377478**

North American Industry Classification Systems Code: **423**

Parent Company:

Number of Employees: **1,000 to 2,499** Number of Sites Verified for: **5**

Are you verifying for more than 1 site? If yes, please provide the number of sites verified for in each State.

- GEORGIA 5 site(s)

Information relating to the Program Administrator(s) for your Company on policy questions or operational problems:

Name: **Kimberly A Stark**
Telephone Number: **(205) 849 - 4279** Fax Number: **(205) 849 - 4565**
E-mail Address: **kimberlystark@thompsontractor.com**

Name: **Frank M Wright**
Telephone Number: **(205) 849 - 4267** Fax Number: **(205) 849 - 4854**
E-mail Address: **frankwright@thompsontractor.com**

Company ID Number: 47130

USCIS Verification Division

Name (Please type or print)	Title
Electronically Signed	**07/11/2007**
Signature	Date